Roadranger

More time on the road®

Illustrated Parts List

RTX-14710C
July 2011

For parts or service call us
Pro Gear & Transmission, Inc.

1 (877) 776-4600

(407) 872-1901

parts@eprogear.com

906 W. Gore St.

Orlando, FL 32805

Contents

How To Use The Illustrated Parts List **3**
AUXILIARY DRIVE GEAR **4**
CASE (AUX) **5**
CASE (FRONT) **7**
COUNTERSHAFT & BRGS(AUX) **9**
COUNTERSHAFT ASSY **10**
FILTER REGULATOR **11**
H & C W/A-5000 VALVE **12**
H & C W/A-5000 VALVE **13**
INPUT SHAFT & DRIVE GEAR **14**
INTEGRAL OIL PUMP **15**
ISOLATORS **17**
KITS & ASSEMBLIES **18**
LEVERS/HOUSINGS **20**
MAINSHAFT & SYNCHRO(AUX) **22**
MAINSHAFT ASSY **23**
MISCELLANEOUS **25**
NON-SELECTIVE M/S ASSY **26**
OIL COOLER **27**
RANGE CYLINDER **28**
REVERSE IDLER **29**
ROADRANGER VALVE **32**
SHIFT BAR HOUSING **33**
SLAVE VALVE - 19470 ..... **35**
SLAVE VALVE - A-5000 ..... **36**

How To Use The Illustrated Parts List

The information contained in this document is subject to frequent updates. Therefore, for the latest information available, please visit the interactive Electronic Parts Catalog at www.roadranger.com/epc.

Model Designation or Nomenclature

- For information regarding Model Designation and Nomenclature, visit www.roadranger.com.

Kits and Assemblies (K/A's)

- Kits and Assemblies contain groups of individual or assembled parts developed for optimal replacement or repair of a service problem.
- Kits and Assemblies are shown with applicable parts groupings in the parts listings.

Identifying Kits and Assemblies

A- Part numbers beginning with the letter 'A' are pre-assembled Production Assemblies
K- Part numbers beginning with the letter 'K' are kits that are not assembled
S- Part numbers beginning with the letter 'S' are pre-assembled Service Assemblies

- Note: Some Production Assemblies do not begin with a letter prefix (Midrange only).

Illustrations

- Illustrations show parts in assembly groups.
- Item numbers on illustrations correspond with parts listings on pages adjacent to the illustration.
- Notes are included on illustrations where additional information is needed.

Parts Listing

Parts listings are defined by parts groupings and are broken down by service assemblies. Parts listings identify a part for servicing with the following categories

- **Item Number** - corresponding with numbers on illlustrations for part identification.
- **Current Part** - indentifies part as it is available for service.
- **Description** - specifies part name or description.
- **Replaced Part** - quantity quantity required for assembly.
- **Quantity** - defines unique characteristics or requirements.
- **Notes** - indicates Kits or Assemblies that contain a particular part.
- **Kits/Assy's Where Used**

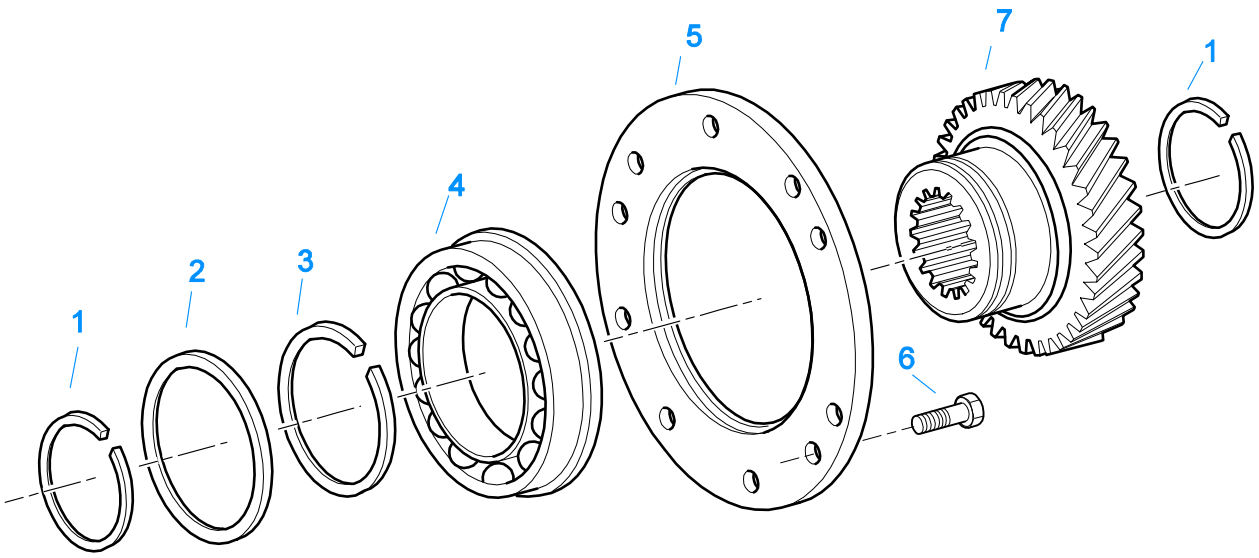

10480-12/92 Aux DG

AUXILIARY DRIVE GEAR

Item	Current Part	Description	Replaced Part	Qty.	Notes	Kits/Assys Where Needed
1	16763	SNAP RING		2		K-2277,K-2336,K-2410,K-3167,K-3695,K-3726
2	21320	SNAP RING RETAINER		1		K-2277,K-2336,K-2410,K-3695,K-3726
3	16628	SNAP RING		1		K-2410,K-3726
4	5566507-BOX	BEARING	5566504,5566507	1		K-2277,K-2336,K-3695,K-3726
5	16138	BEARING RETAINER		1		
6	X-8-645	CAPSCREW	X 8 612	6	3/8"-16X1"	
7	23159	AUXILIARY DRIVE GEAR	21321	1		

Group: CASE (AUX)

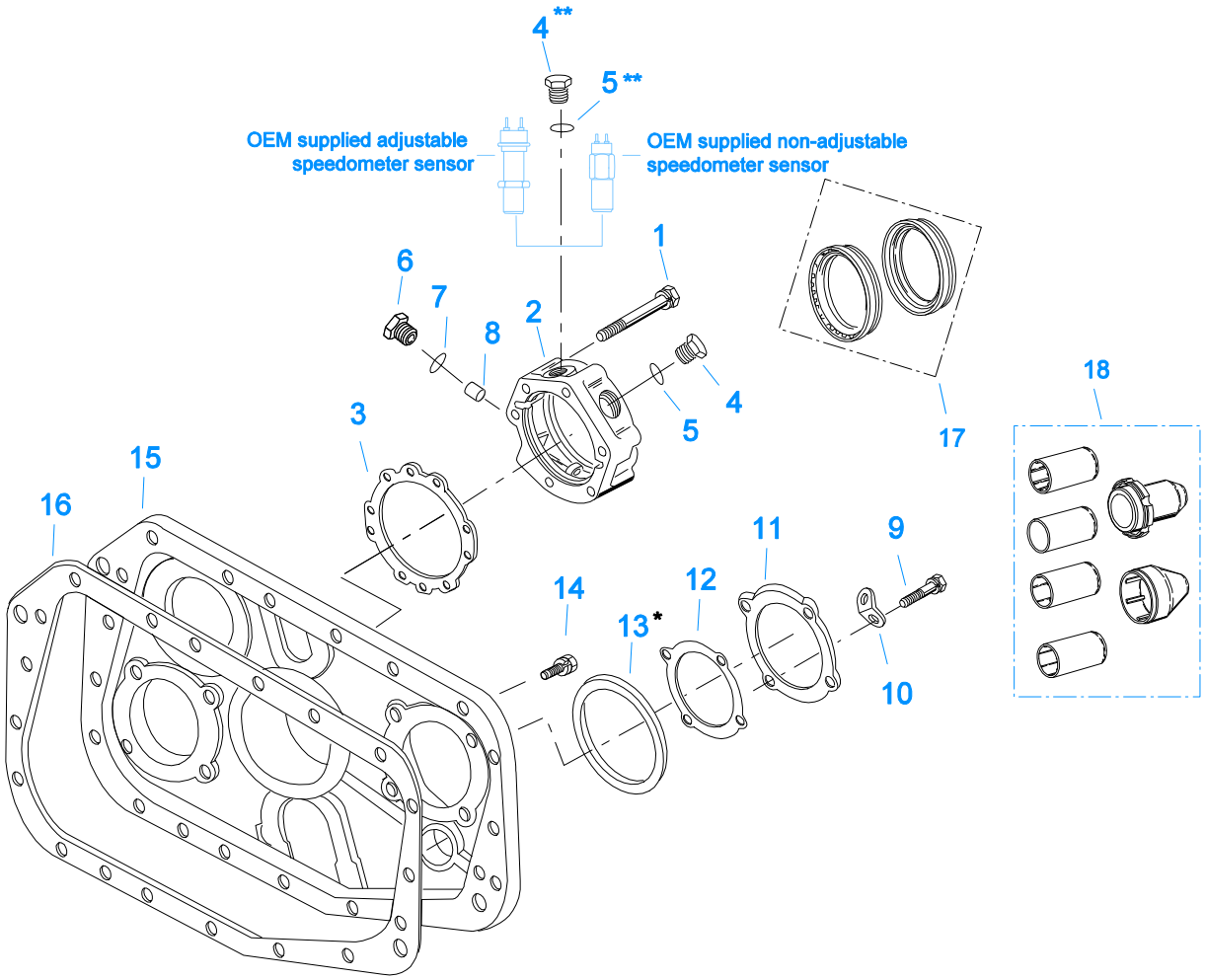

** Note — Items 4 & 5 / Magnetic Speedometer Openings:
Use 13679 "O" ring w/ OEM supplied adjustable speedometer sensor
and 20225 "O" ring w/ OEM supplied non-adjustable speedometer sensor or Eaton part #20224 Plug

* See Service Manual for Proper Shimming Procedure

10400-1/92 Aux Case

CASE (AUX)

Item	Current Part	Description	Replaced Part	Qty.	Notes	Kits/Assys Where Needed
1	X-8L-631	CAPSCREW	X 8 631	6	3/8"-16X3-1/2"	
2	S-2159	REAR BRG COVER ASSY	S - 1760	1		
3	21364	GASKET		1		K-2061,K-2262,K-2327,S-2159
4	20224	PLUG-MAGNETIC		2		S-1941,S-2159
5	13679	-O- RING		1	USE W/ OEM SUPPLIED ADJUSTABLE SPEEDOMETER SENSOR	
5	20225	-O- RING		2	USE W/20224 PLUG OR OEM SUPPLIED NON-ADJUSTABLE SPEEDOMETER SENSOR	
6	20226	PLUG-MECHANICAL	2237	1		S-1941,S-2159
7	14142	-O- RING		1	USE W/20226 PLUG	S-1941,S-2159
8	7992	BUSHING		1		S-2159
9	X-8L-600	CAPSCREW		8	3/8"-16X1"	
10	20815	LIFTING EYE	17105	2		
11	4302320	COVER	21346	2		S-1941
12	4305978	GASKET	4302246	2		K-2061,K-2327,S-1941
13	K-2805	SHIM KIT	21452 K - 2106	1		K-2277,K-2336,K-3695,K-3726,S-1941
14	X-8L-602	CAPSCREW		16	3/8"-16X1-1/2"	

Item	Current Part	Description	Replaced Part	Qty.	Notes	Kits/Assys Where Needed
14	X-8L-614	CAPSCREW		2	3/8"-16X2"	
14	X-8L-616	CAPSCREW	X 8 616	1	USE W/STD REAR BRG CVR 3/8"-16X2-3/4"	
15	22900	REAR HOUSING		1		
16	14335	GASKET		1		K-2061,K-2327,S-1941
17	K-2262	OIL SEAL W/SLINGER	19109 20807 20808	1	"FOR MECHANICAL COVER"	K-2277,K-2336,K-3695,K-3726
18	K-3651	OIL SEAL TOOL KIT		1		

Group: CASE (FRONT)

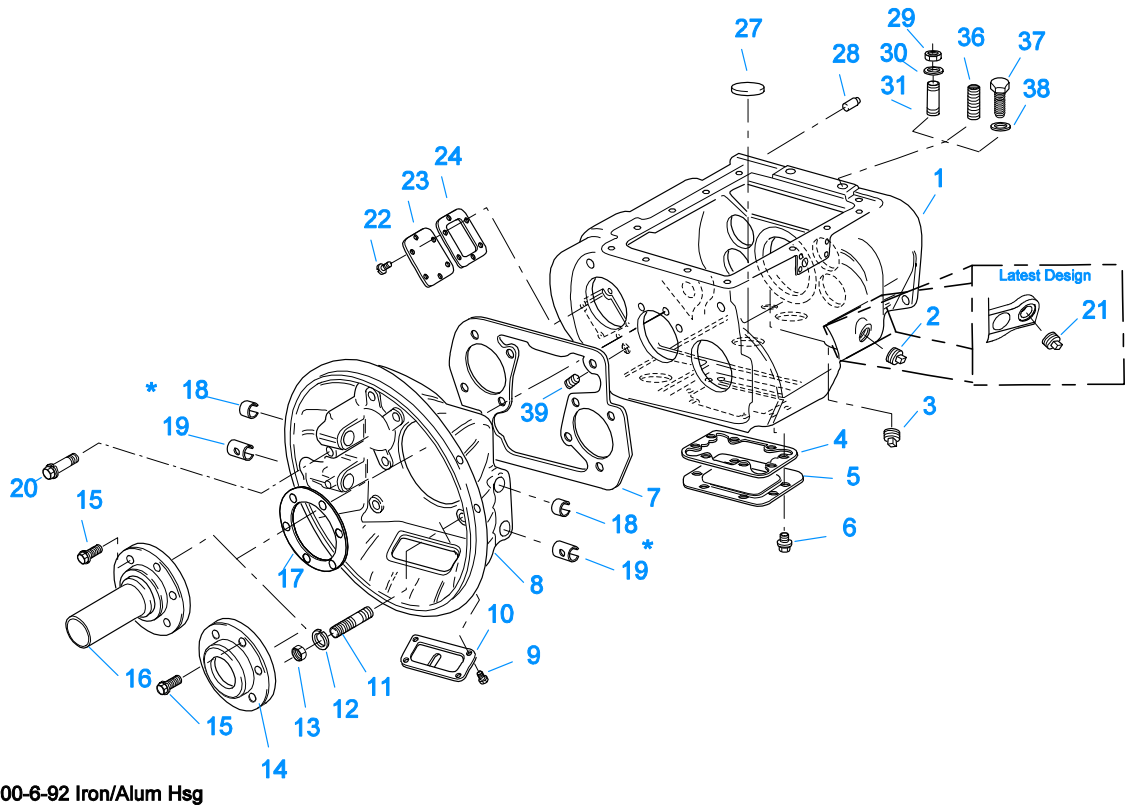

10300-6-92 Iron/Alum Hsg

* Bushing quantity requirements: #1 Housing – Upper bore use 4 #12815 / Lower bore use 2 #8677.
#2 Housing – Upper bore use 2 #12815 and 1 #8677 / Lower bore use 2 #8677.

Note: Some part requirements are specific to #1 or #2 Aluminum or Iron Clutch Housings and Push or Pull type Clutch.

CASE (FRONT)

Item	Current Part	Description	Replaced Part	Qty.	Notes	Kits/Assys Where Needed
1	S-1736	CASE ASSY	23654	1		
1	S-1826	CASE ASSY	23650	1	FOR USE W/INTEGRAL PUMP	
2	X-12-2007	PIPE PLUG	X12 2006	1		
3	X-12-1207	PIPE PLUG	X12 1202 ,X12 1206	1	3/4" MAGNETIC	
4	4305310	GASKET	4302810	1		K-2061
5	4302809	PTO COVER	16596 ,4300571	1		
6	X-8-725	CAPSCREW	X 8 724	8	7/16"-14X7/8"	
7	4306584	CLUTCH HOUSING GASKET	4304815,4305668	1		K-2061
8	A-3713	CLUTCH HOUSING ASSY	A - 3700	1	#1 PUSH-PULL IRON	
8	A-3723	CLUTCH HOUSING ASSY	A - 3721 ,A - 3722	1	#2 PUSH-PULL IRON	
8	A-4772	CLUTCH HOUSING ASSY	A - 4344 ,A - 4771	1	#2 PUSH-PULL ALUM.	
8	A-6064	CLUTCH HOUSING ASSY	A - 4342 ,A - 4770 ,A - 6062 ,A - 6063 ,A - 6065	1	#1 PUSH-PULL ALUM.	
9	239614	SCREW	X-8L-509	4	5/16-18X.81 QUANTITY DEPENDENT ON DESIGN	
10	14506	HAND HOLE COVER		1	#2 PUSH	
10	14507	HAND HOLE COVER		1	#2 PULL	
10	4305230	HAND HOLE COVER	11453	1	#1 PULL	
10	4305231	HAND HOLE COVER	1565	1	#1 PUSH	
11	4306583	STUD	5966	6		
12	X-10-1005	WASHER	X 3 1000 ,X10 1000 ,X10 1004	6	1.23 X 6.60	
13	X-1-1012	HEX NUT	X-1-1005	6	.625-18	
14	20550	FRONT BEARING COVER		1	2" PULL	K-2468,K-3695,K-3726,K-4125
15	X-8L-604	CAPSCREW		6	3/8"-16X1-1/4"	
16	20549	FRONT BEARING COVER		1	2" PUSH	
17	14311	GASKET		1		K-2061
18	12815	BUSHING		4	FOR #1 HOUSING UPPER	A-3713,A-3723,A-

Item	Current Part	Description	Replaced Part	Qty.	Notes	Kits/Assys Where Needed
18	12815	BUSHING		2	FOR #2 HOUSING UPPER	4772,A-6064,K-2468,K-3695,K-3726 A-3713,A-3723,A-4772,A-6064,K-2468,K-3695,K-3726
18	8677	BUSHING		1	FOR #2 HOUSING UPPER	A-3713,A-3723,A-4772,A-6064
19	8677	BUSHING		2	FOR #1 AND #2 HOUSING LOWER	A-3713,A-3723,A-4772,A-6064
20	X-8C-830	HEX HEAD SCREW/WASHER ASSY	X-8C-826	4	.500-13 X 1.490, USE 2 PCS FOR IRON HOUSING, USE 4 PCS FOR ALUMINUM HOUSING	
20	X-8C-831	HEX HEAD SCREW/WASHER ASSY	X-8C-822	2	.500-13 X 3.460, FOR IRON HOUSING	
21	4304023	PLUG	4303747	1	1-1/16" MAGNETIC, O-RING INCLUDED	K-3726,S-1736,S-1826
22	X-8-686	CAPSCREW		6	3/8"-16X3/4"	
23	14575	PTO COVER	4302254	1		
24	4305309	GASKET	1684	1		K-2061
27	14373	MAGNET		3		K-3695,K-3726,S-1736,S-1826
28	18128	PIN		2		
29	X-1-1012	HEX NUT		2	.625-18	
30	X-10-1005	WASHER	X 3 1000 ,X10 1000 ,X10 1004	2	1.23 X 6.60	
31	14554	STUD	1632 ,6579	2	5/8" X 2-3/16"	
36	23104	PLUG	1712	2		
37	X-8-1005	CAPSCREW		2	5/8"-11X1-1/4"	
38	20814	SPACER		2		
39	X-12-802	PIPE PLUG	X12 800	1	1/2"	

Group: COUNTERSHAFT & BRGS(AUX)

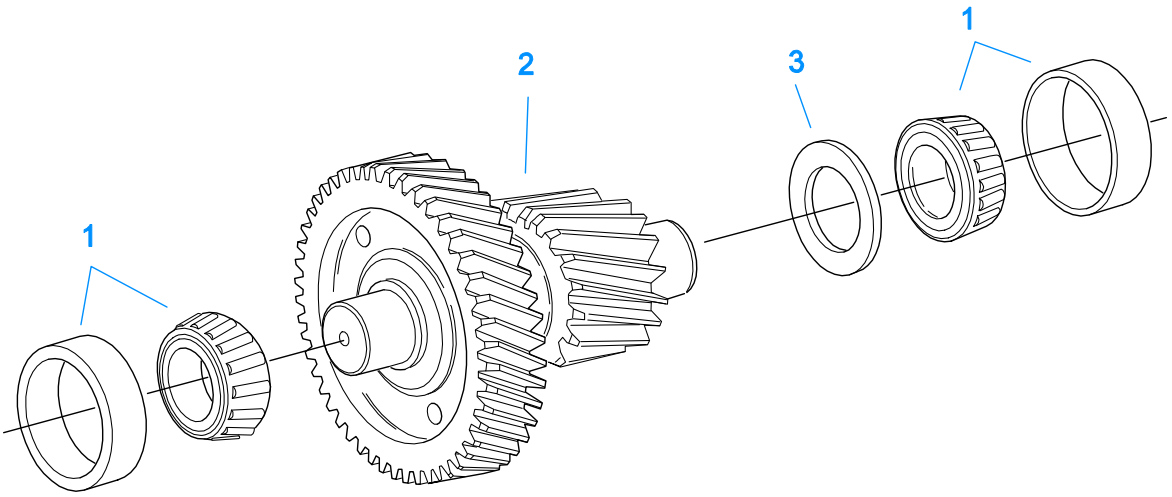

10440-1/92 Aux CS Helical

COUNTERSHAFT & BRGS(AUX)

Item	Current Part	Description	Replaced Part	Qty.	Notes	Kits/Assys Where Needed
1	4302074-BOX	BEARING	21343,4302074	4		K-2277,K-2336,K-3695,K-3726
2	A-6339	WELDED COUNTERSHAFT ASSY	A - 6073	2	C/S 4302091 - D/G 23160	
3	22903	SPACER		2		K-2410

Group: COUNTERSHAFT ASSY

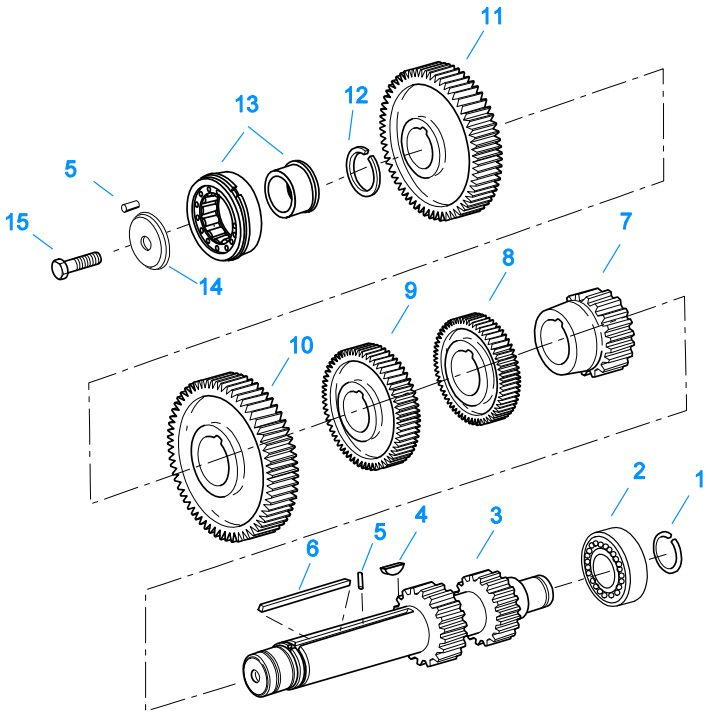

10341-1/92 CS/RT

COUNTERSHAFT ASSY

Item	Current Part	Description	Replaced Part	Qty.	Notes	Kits/Assys Where Needed
1	14317	SNAP RING		2		K-2277,K-2336,K-2410,K-3695,K-3726
2	14366	BEARING		2		K-2277,K-2336,K-3695,K-3726
3	K-2942	CNTRSHFT-W/REV & 1ST	4301224 ,4301225	2		
4	X-6-E	KEY		2		
5	62511	ROLL PIN		4		
6	4304840	KEY	19673	2		
7	20382	2ND GEAR-CNTRSHFT	19269 ,4302103 ,4303512	2		
8	21264	3RD GEAR-CNTRSHFT	19623	2		
9	21262	OD GEAR-CNTRSHFT	19639 ,21027	2	SEE INPORTANT NOTE ON ILLUSTRATION	
9	4300191	OD GEAR-CNTRSHFT	4305071	2	SEE INPORTANT NOTE ON ILLUSTRATION	K-3726
10	15953	PTO GEAR - LOWER		1		
10	20840	PTO GEAR - UPPER	15952	1		
11	4305665	DRIVE GEAR-CNTRSHFT	21018,4305069	2		K-3695,K-3726
12	19198	SNAP RING		2		
13	4304599	BEARING	4302677 4304598	2		K-2277,K-2336,K-3695,K-3726
14	4304605	RETAINER	19548	2	ROLL PIN NO LONGER REQUIRED	
15	X-7-1005	CAPSCREW		2	5/8"-18X1-3/4"	

Group: FILTER REGULATOR

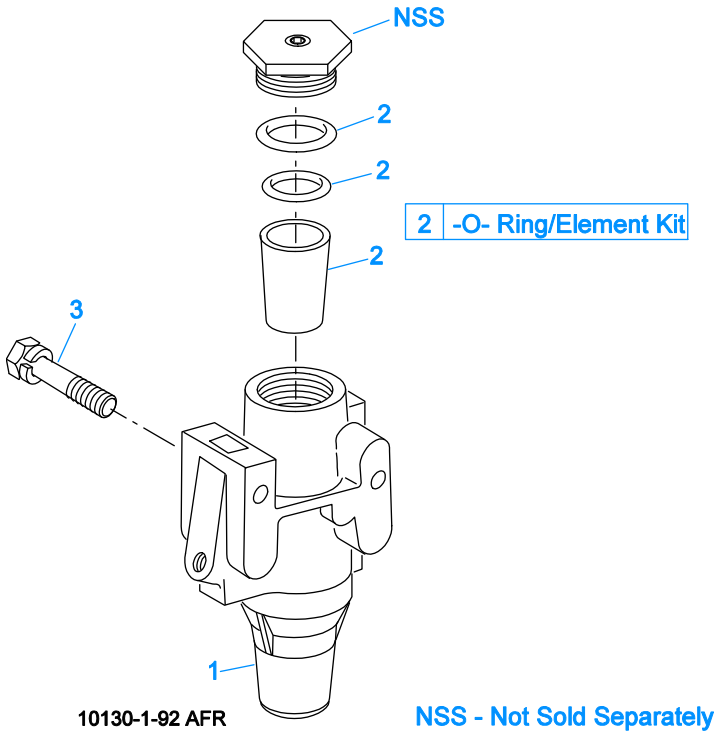

FILTER REGULATOR

Item	Current Part	Description	Replaced Part	Qty.	Notes	Kits/Assys Where Needed
1	A-4740	FILTER/REGULATOR	19600	1		K-3695,K-3726
2	K-1698	-O- RING/ELEMENT KIT		1	FOR FILTER REGULATOR	
3	X-8C-412	CAPSCREW	X 8S 412	2	1/4"-20X2-1/4"	

Group: H & C W/A-5000 VALVE

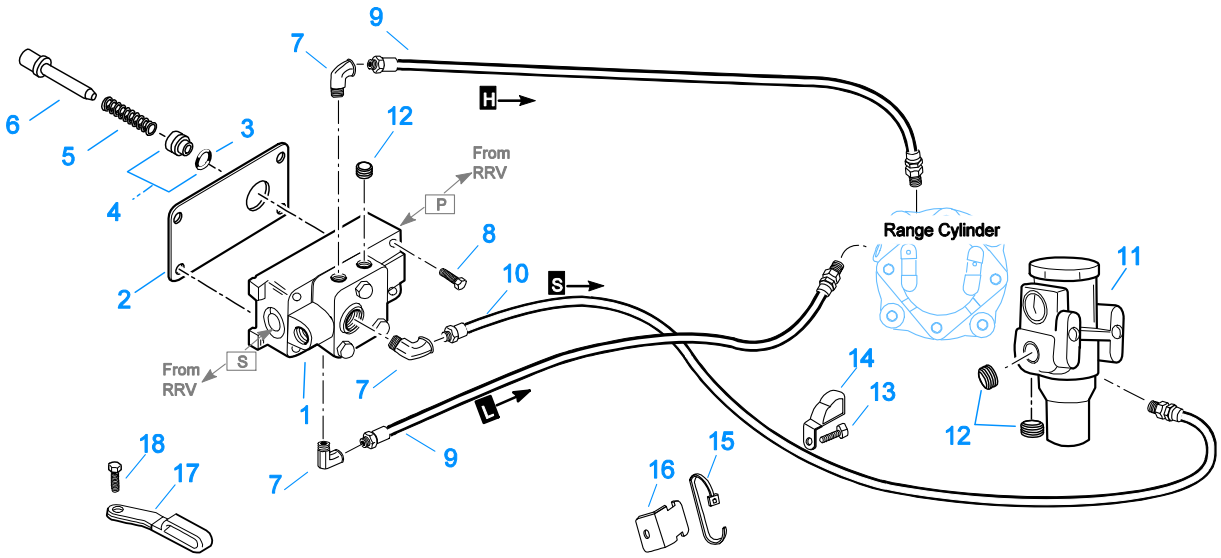

10110-1/92 A-5000 HC

H & C W/A-5000 VALVE

Item	Current Part	Description	Replaced Part	Qty.	Notes	Kits/Assys Where Needed
1	A-5000	SLAVE VALVE ASSY	20850	1		K-2424,K-3695,K-3726
2	19481	GASKET		1		K-2061,K-2424
3	19462	-O- RING	14033	1		K-1969,K-3726
4	K-1969	SLEEVE KIT	14362 ,19460 ,21446	1	FOR SLAVE VALVES	
5	21268	SPRING	19572	1		
6	20490	PIN	19459	1		
7	12845	ELBOW		3	1/8"	K-3695,K-3726
8	X-8C-411	CAPSCREW		4	1/4"-20X1-3/4"	
9	55508	HOSE ASSY		1	30"-FROM "H" PORT TO RANGE CYLINDER COVER	K-3695,K-3726
9	55523	HOSE ASSY		1	29"-FROM "L" PORT TO RANGE CYLINDER	
10	55508	HOSE ASSY		1	30"-FROM "S" PORT TO AIR FILTER REGULATOR	K-3695,K-3726
11	A-4740	FILTER/REGULATOR	19600	1		K-3695,K-3726
12	X-12-208	PIPE PLUG		3	1/8" NPT	
13	X-8L-600	CAPSCREW		1	3/8"-16X1"	
14	21427	HOSE CLAMP		1		K-3695,K-3726
15	21425	STRAP		1		K-3726
16	21426	BRACKET		1		K-3726
17	21428	HOSE CLAMP		1		K-3695,K-3726
18	X-8L-604	CAPSCREW		1	3/8"-16X1-1/4"	

Group: H & C W/A-5000 VALVE

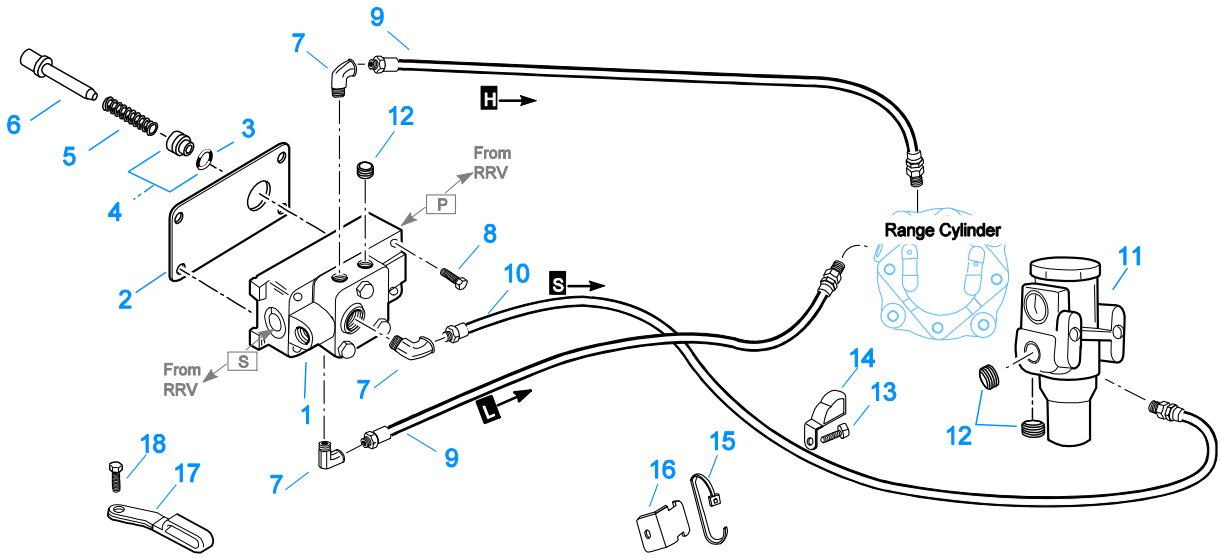

10110-1/92 A-5000 HC

H & C W/A-5000 VALVE

Item	Current Part	Description	Replaced Part	Qty.	Notes	Kits/Assys Where Needed
1	A-5000	SLAVE VALVE ASSY	20850	1		K-2424,K-3695,K-3726
2	19481	GASKET		1		K-2061,K-2424
3	19462	-O- RING	14033	1		K-1969,K-3726
4	K-1969	SLEEVE KIT	14362 ,19460 ,21446	1	FOR SLAVE VALVES	
5	21268	SPRING	19572	1		
6	20490	PIN	19459	1		
7	12845	ELBOW		3	1/8"	K-3695,K-3726
8	X-8C-411	CAPSCREW		4	1/4"-20X1-3/4"	
9	55508	HOSE ASSY		1	30" - FOR "H" PORT	K-3695,K-3726
9	55523	HOSE ASSY		1	29" - FOR "L" PORT	
10	55508	HOSE ASSY		1	30" - FOR "S" PORT	K-3695,K-3726
11	A-4740	FILTER/REGULATOR	19600	1		K-3695,K-3726
12	X-12-208	PIPE PLUG		3	1/8" NPT	
13	X-8L-600	CAPSCREW		1	3/8"-16X1"	
14	21427	HOSE CLAMP		1		K-3695,K-3726
15	21425	STRAP		1		K-3726
16	21426	BRACKET		1		K-3726
17	21428	HOSE CLAMP		1		K-3695,K-3726
18	X-8L-604	CAPSCREW		1	3/8"-16X1-1/4"	

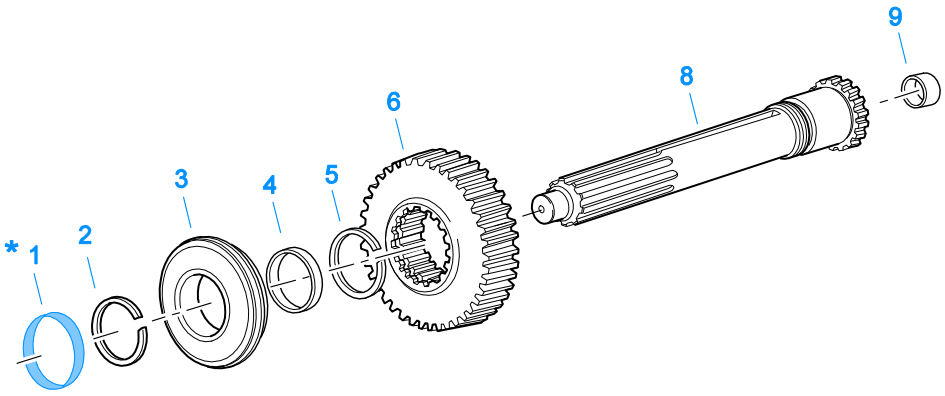

10370-1/92 IS

INPUT SHAFT & DRIVE GEAR

Item	Current Part	Description	Replaced Part	Qty.	Notes	Kits/Assys Where Needed
1	23559	SHIPPING SEAL		1	NOT SOLD FOR SERVICE	
2	16980	SNAP RING		1		K-2336,K-2410,K-2468,K-3695,K-3726,K-4125
3	81504	BEARING		1		K-2277,K-2336,K-2468,K-3695,K-3726,K-4125
4	16463	SPACER		1		
5	14750	SNAP RING		1		K-2277,K-2336,K-2410,K-2468,K-3695,K-3726,K-4125
6	22961	MAIN DRIVE GEAR	22959	1		
8	S-1659	INPUT SHAFT	23566	1	2" PULL	K-2336,K-2468,K-3695,K-3726,K-4125
8	S-1660	INPUT SHAFT	23567	1	2" PUSH	
9	16566	BUSHING		1		K-2277,S-1659,S-1660

Group: INTEGRAL OIL PUMP

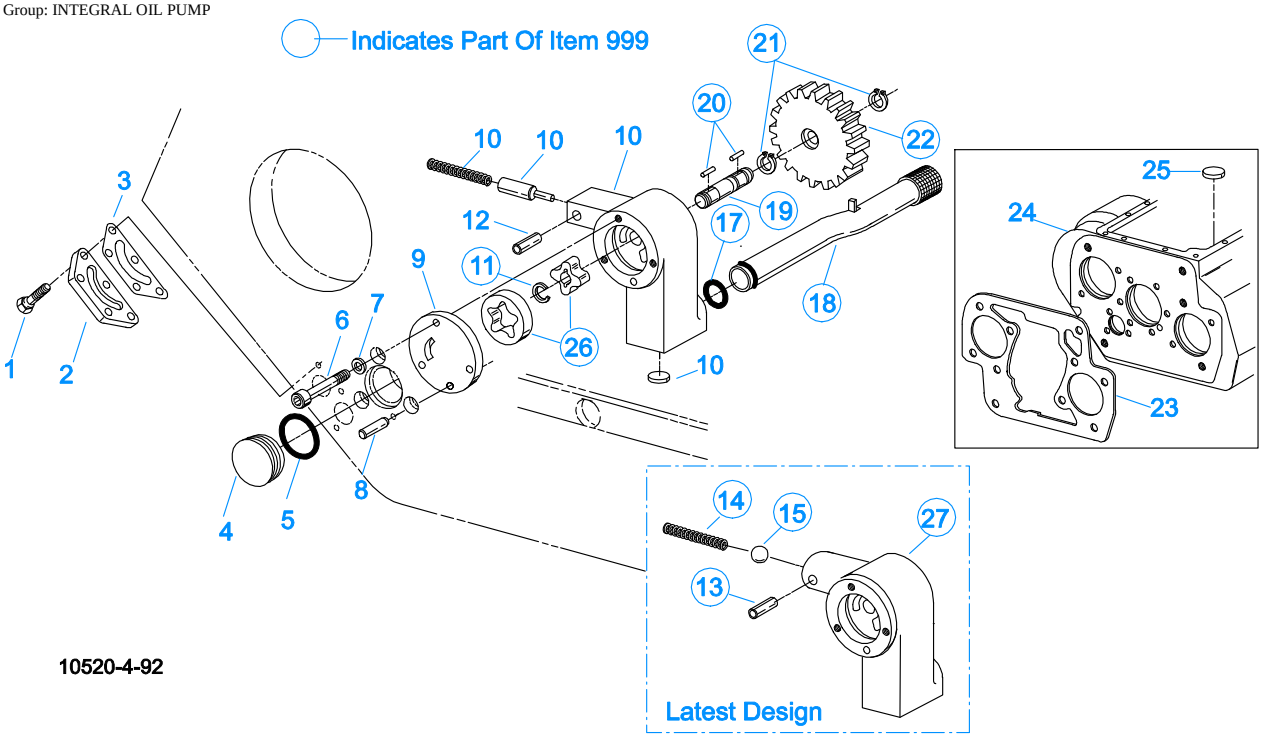

INTEGRAL OIL PUMP

Item	Current Part	Description	Replaced Part	Qty.	Notes	Kits/Assys Where Needed
1	X-8C-409	CAPSCREW		5	1/4"-20X5/8" - USE WITH 4300751 COVER	
1	X-8C-430	CAPSCREW		5	1/4"-20X7/8" - USE WITH 20513 COVER	
2	K-2402	COVER & SCREW KIT	20513 ,4300751	1		
3	20514	GASKET		1		K-2061,K-2402
4	20823	PLUG		1		
5	14765	-O- RING		1		K-1431,K-1450
6	X-8-448	SCREW	X 8 445	3	1/4"-20X1-1/4"	
7	20824	WASHER		3		K-3367
8	20825	DOWEL PIN		1		
9	4303107	RETAINER	20510	1		S-1826
10	K-3367	OIL PUMP KIT	4301829 ,4301948 ,4303776 ,4304529 ,4304572 A - 6963 ,A - 7173	1		
11	20518	CRESCENT RING		1		
12	62516	ROLL PIN	62521	1		
13	62514	ROLL PIN		1		
14	K-3367	OIL PUMP KIT	4301829 ,4301948 ,4303776 ,4304529 ,4304572 A - 6963 ,A - 7173	1		
15	X-14-700	STEEL BALL		1	7/16"	
17	20225	-O- RING		1		
18	4305713	SUCTION TUBE	4304628	1	O-RING INCLUDED ON SUCTION TUBE	K-3367
19	20508	DRIVE SHAFT		1		
20	20509	KEY		2		
21	14853	SNAP RING		2		
22	20511	DRIVE GEAR		1		
23	4306584	CLUTCH HOUSING GASKET	4304815,4305668	1		K-2061
24	S-1826	CASE ASSY	23650	1	FOR USE W/INTEGRAL PUMP	
25	14373	MAGNET		3		K-3695,K-3726,S-1736,S-1826
26	20507	ELEMENT		1		
27	K-3367	OIL PUMP KIT	4301829 ,4301948 ,4303776 ,4304529	1		

Item	Current Part	Description	Replaced Part	Qty.	Notes	Kits/Assys Where Needed
999	K-3367	OIL PUMP KIT	,4304572 A - 6963 ,A - 7173 4301829 ,4301948 ,4303776 ,4304529 ,4304572 A - 6963 ,A - 7173	1		

Group: ISOLATORS

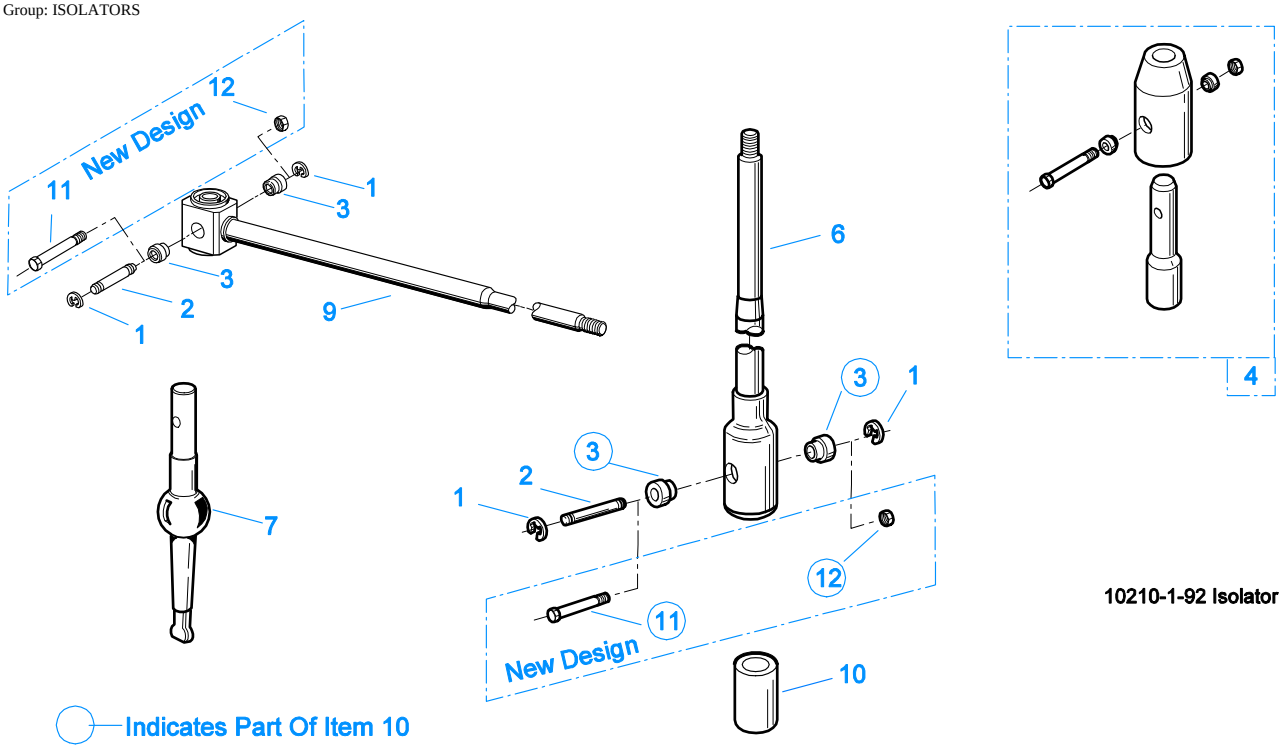

10210-1-92 Isolator

ISOLATORS

Item	Current Part	Description	Replaced Part	Qty.	Notes	Kits/Assys Where Needed
1	19124	-E- RING		2		
2	K-3467	PIN REPLACEMENT KIT	21245	1		
3	21246	BUSHING		2		K-2003,K-2428,K-2429,K-2978,K-3399,S-2129,S-2130,S-2519
4	S-1794	ISOLATOR ASSY		1		
6	21247	LEVER		1	STRAIGHT 18.67"	
7	21235	STUB LEVER		1	LOW TOWER	K-2428,S-1677
7	21236	STUB LEVER		1	HIGH TOWER	K-2429,S-1579,S-2130
7	4301168	STUB LEVER		1	MID TOWER	K-2978
9	21767	90 DEG LEVER		1	STRAIGHT 33"	
10	K-3399	ISOLATOR BUSHING KIT	21244 ,23311	1		
11	X-8-560	SCREW		1		
12	X-9-503	NUT		1		

KITS & ASSEMBLIES

Item	Current Part	Description	Replaced Part	Qty.	Notes	Kits/Assys Where Needed
	K-1431	RANGE CYL-KIT		1		
	K-1450	-O- RING KIT-RANGE		1		K-2277,K-2336,K-3695,K-3726
	K-1476	SHIFT LEVER HSG	4530 ,17163 ,18298 ,4304905 ,A - 4437	1	LOW TOWER	
	K-1698	-O- RING/ELEMENT KIT		1	FOR FILTER REGULATOR	
	K-1921	MASTER VALVE REPAIR KIT		1	FOR A-6909 & A-5010 VALVES	
	K-1935	REPAIR KIT-SLAVE VALVE		1	FOR A-5000 VALVE	
	K-1956	COOLER INSTLN KIT		1		
	K-1969	SLEEVE KIT	14362 ,19460 ,21446	1	FOR SLAVE VALVES	
	K-2003	PIN & BUSHING KIT		1		
	K-2061	GASKET KIT		1		K-2277,K-2336,K-3695,K-3726
	K-2262	OIL SEAL W/SLINGER	19109 20807 20808	1	"FOR MECHANICAL COVER"	K-2277,K-2336,K-3695,K-3726
	K-2277	BASIC REBUILD KIT		1		
	K-2327	GASKET KIT		1	FOR AUXILIARY SECTION	
	K-2336	BASIC OVERHAUL KIT		1		
	K-2366	KEY & WASHER KIT	21326 ,4300763 ,4304614	1	CONTAINS 3-SIDED KEY	
	K-2394	AIR SYSTEMS TOOL KIT		1		
	K-2402	COVER & SCREW KIT	20513 ,4300751	1		
	K-2410	SMALL PARTS KIT		1		
	K-2424	VALVE REPLACEMENT KIT	19470	1		
	K-2428	LEVER REPLACEMENT KIT		1	LOW TOWER	
	K-2429	LEVER REPLACEMENT KIT		1	HIGH TOWER	
	K-2468	CLUTCH INSTALLATION KIT		1	FOR USE WITH S-1659 INPUT SHAFT ASSY AND 81504 INPUT SHAFT BEARING	
	K-2805	SHIM KIT	21452 K - 2106	1		K-2277,K-2336,K-3695,K-3726,S-1941
	K-2942	COUNTERSHAFT REPL KIT	4301224 ,4301225	1		
	K-2973	SHIFT LEVER HSG KIT	17166 ,17167 ,4303050 ,4304910 ,K - 1630 K - 1941	1	HIGH TOWER	
	K-2977	SHIFT LEVER HSG KIT	4301167 ,4304907 ,A - 6040	1	MID TOWER	
	K-2978	LEVER REPLACEMENT KIT		1	MID TOWER	
	K-3167	WASHER UPDATE KIT		1		
	K-3209	IDLER SHAFT REPL KIT	16405 ,4302981 ,4305513	1		
	K-3367	OIL PUMP KIT	4301829 ,4301948 ,4303776 ,4304529 ,4304572 A - 6963 ,A - 7173	1		
	K-3399	ISOLATOR BUSHING KIT	21244 ,23311	1		
	K-3467	PIN REPLACEMENT KIT	21245	1		
	K-3492	SYNCHRONIZER KIT	K - 2446	1		
	K-3494	SYNCHRONIZER REPLACEMENT KIT	K - 2448	1	SLIDING CLUTCH INCLUDED IN KIT	
	K-3651	OIL SEAL TOOL KIT		1		
	K-3695	MASTER REBUILDER KIT		1	USE TO REBUILD RTX-14710C W/SELECTIVE WASHERS ONLY	
	K-3726	MASTER REBUILDER KIT		1	USE TO REBUILD RTX-14710C W/NON-SELECTIVE WASHERS ONLY	
	K-4125	CLUTCH INSTALLATION KIT (RT), HYDRAULIC RELEASE		1	STANDARD RT INPUT SHAFT AND YOKE FOR HYDRAULIC CLUTCH RELEASE	
	S-1219	YOKE ASSY LOW-REV		1		
	S-1404	OIL FILTER	17238	1		

Item	Current Part	Description	Replaced Part	Qty.	Notes	Kits/Assys Where Needed
	S-1445	SHIFT BAR HSG (X)	18920 ,20135 ,20214 ,20215 ,20487 21135 ,4302452	1	HOUSING ONLY (X)	
	S-1516	CAP ASSY	20851 ,20853	1		
	S-1527	SHIFT BAR HSG ASSY (X)	20215 ,21135 ,4302452	1	COMPLETE (X)	
	S-1659	INPUT SHAFT	20535 23566 4302661	1	2" PULL - USE W/FBC 20550	K-2336,K-2468,K-3695,K-3726,K-4125
	S-1660	INPUT SHAFT	23567	1	2" PUSH - USE W/FBC 20549	
	S-1736	CASE ASSY	23654	1		
	S-1794	ISOLATOR ASSY		1		
	S-1826	CASE ASSY	23650	1	FOR USE W/INTEGRAL PUMP	
	S-1941	RANGE SECTION ASSY		1		
	S-1941R	REMAN RANGE SECTION ASSY		1		
	S-2129	SHIFT LEVER HSG ASSY		1	LOW TOWER	
	S-2130	SHIFT LEVER HSG ASSY	S - 2053	1	HIGH TOWER	
	S-2159	REAR BRG COVER ASSY	S - 1760	1		
	S-2519	SHIFT LEVER HSG ASSY	S - 2919	1	MID TOWER	
	S-2688	MAINSHAFT ASSY	4303404 4303913	1		K-3167

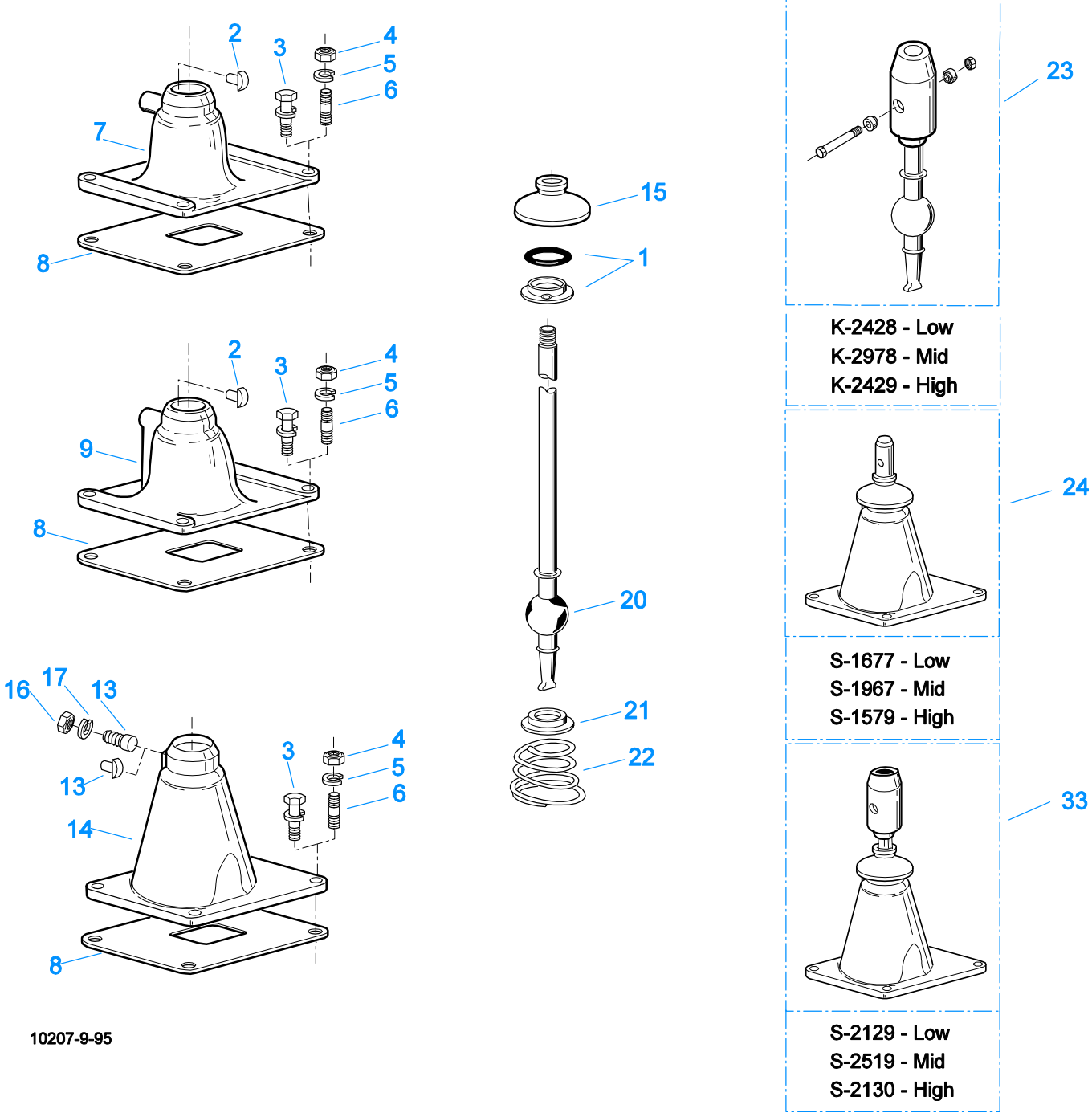

LEVERS/HOUSINGS

Item	Current Part	Description	Replaced Part	Qty.	Notes	Kits/Assys Where Needed
1	K-3376	O-RING & WASHER KIT	4301211	1		
2	18299	PIN		1		K-1476,K-2977,S-1677
3	X-8C-604	CAPSCREW		4	3/8"-16X1-1/4"	S-1445,S-1527
4	X-1-600	NUT		4	3/8"-24-N.F.PLAIN	
5	X-3-600	LOCKWASHER		4	3/8"	
6	11934	STUD	7467	4		
7	K-1476	SHIFT LEVER HSG	4530 ,17163 ,18298 ,4304905 ,A - 4437	1	LOW TOWER	
8	4305294	GASKET	4303431	1		K-1476,K-2061,K-2428,K-2429,K-2973,K-2977,K-2978,S-

Item	Current Part	Description	Replaced Part	Qty.	Notes	Kits/Assys Where Needed
						1527,S-1579,S-1677,S-1967,S-2129,S-2130,S-2519
9	K-2977	SHIFT LEVER HSG KIT	4301167 ,4304907 ,A - 6040	1	MID TOWER	
13	4303030	PIN		1		K-2973,S-1579,S-2130
13	6541	PIN		1	3/8" - USED W/17167 ONLY	
14	K-2973	SHIFT LEVER HSG KIT	17166 ,17167 ,4303050 ,4304910 ,K - 1630 K - 1941	1	HIGH TOWER	
15	10427	BOOT		1		K-1476,K-2973,K-2977,S-1579,S-1677,S-2130
16	X-1-600	NUT		1	3/8"-24-N.F.PLAIN	
17	X-3-600	LOCKWASHER		1	3/8"	
20	17600	GEAR SHIFT LEVER		1	STRAIGHT - LOW 21-1/2"	
20	18482	GEAR SHIFT LEVER		1	STRAIGHT - HIGH 35"	
21	2538	RETAINER		1		K-1476,K-2973,K-2977,S-1579,S-1677,S-2130
22	2536	SPRING		1		K-1476,K-2973,K-2977,S-1579,S-1677,S-2130
23	K-2428	LEVER REPLACEMENT KIT		1	LOW TOWER	
23	K-2429	LEVER REPLACEMENT KIT		1	HIGH TOWER	
23	K-2978	LEVER REPLACEMENT KIT		1	MID TOWER	
24	S-1579	SHIFT TOWER ASSY		1	HIGH TOWER	
24	S-1677	SHIFT TOWER ASSY		1	LOW TOWER	
24	S-1967	SHIFT TOWER ASSY		1	MID TOWER	
33	S-2129	SHIFT LEVER HSG ASSY		1	LOW TOWER	
33	S-2130	SHIFT LEVER HSG ASSY	S - 2053	1	HIGH TOWER	
33	S-2519	SHIFT LEVER HSG ASSY	S - 2919	1	MID TOWER	

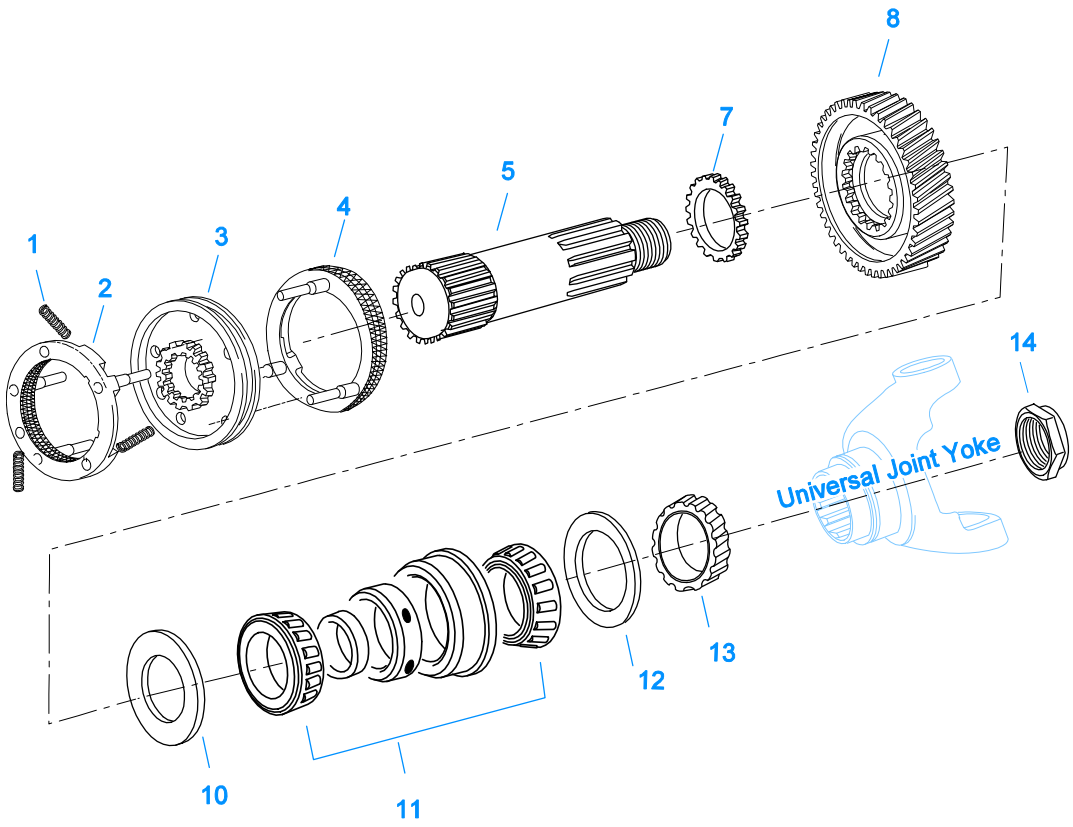

10421-12-93

MAINSHAFT & SYNCHRO(AUX)

Item	Current Part	Description	Replaced Part	Qty.	Notes	Kits/Assys Where Needed
1	14897	SPRING		3		K-2277,K-2336,K-2410,K-3492,K-3494,K-3695,K-3726
2	A-7331	SYNCHRONIZER ASSY	4304396 4304397 A - 5917	1	HI RANGE	K-3492,K-3494,K-3695,K-3726
3	20323	SLIDING CLUTCH		1		K-3494,K-3695,K-3726
4	A-7254	SYNCHRONIZER ASSEMBLY	A - 4937 A - 5876	1	LO RANGE	K-3492,K-3494,K-3695,K-3726
5	4300312	AUXILIARY MAINSHAFT	22970	1		
7	22899	WASHER		1		K-2410,K-3695,K-3726
8	4302090	REDUCTION GEAR	4301227	1		
10	22898	SPACER		1		K-2410,K-3695,K-3726
11	21356-BOX	BEARING	21356	1		K-2277,K-2336,K-3695,K-3726
12	22969	SPACER		1		
13	20191	ROTOR		1		
14	22254	NUT		1		K-3726,S-1941

Group: MAINSHAFT ASSY

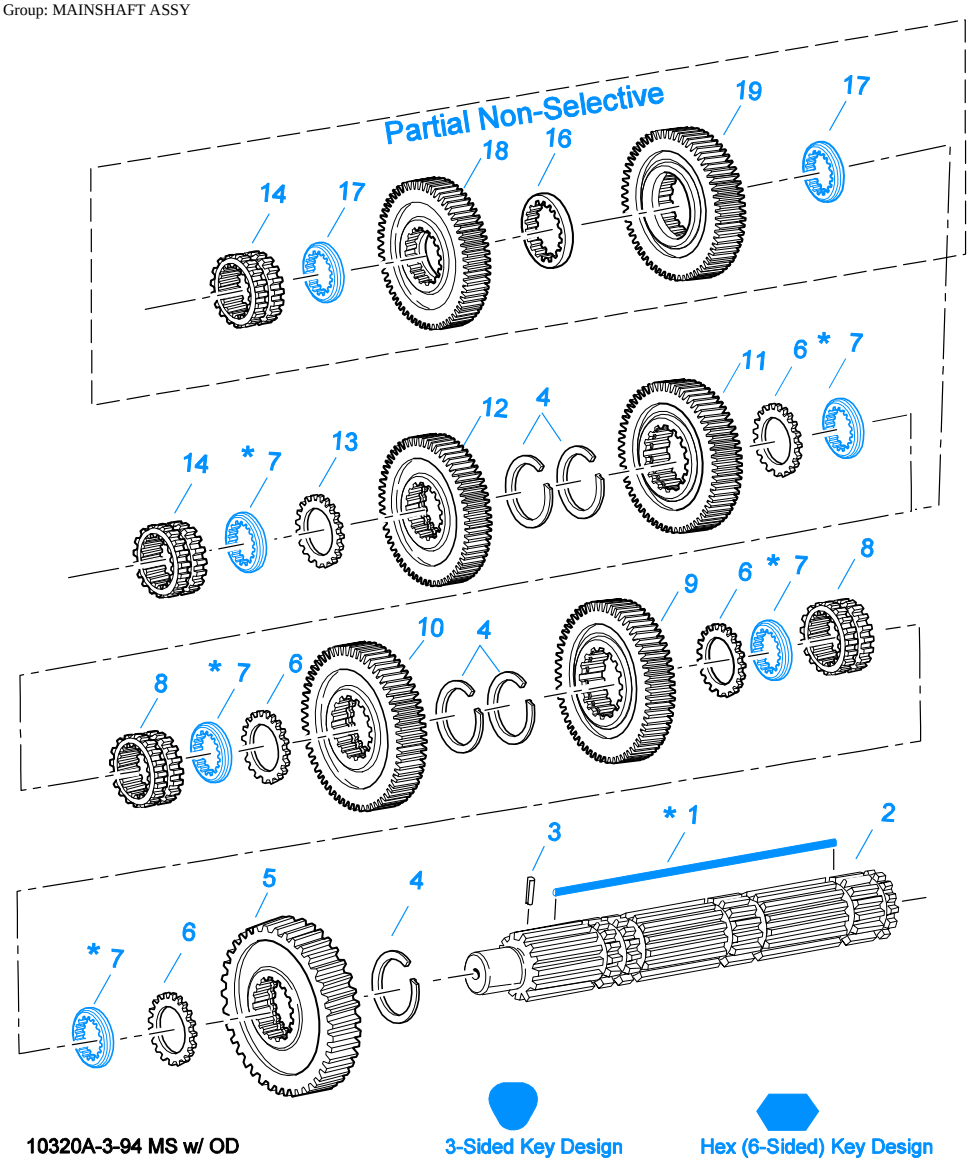

* Updating to 3-Sided Key is Recommended.
When Updating to 3-Sided Key Replace all Washers to Match Key Design
Always Use Matching Key and Washer Sets (See Appendix - Mainshaft Washers)

MAINSHAFT ASSY

Item	Current Part	Description	Replaced Part	Qty.	Notes	Kits/Assys Where Needed
1	4304614	3-SIDED KEY	4300890	1		K-2366,K-2410,K-3167,K-3695,K-3726
1	K-2366	KEY & WASHER KIT	21326 ,4300763 ,4304614	1	CONTAINS 3-SIDED KEY	
2	S-2688	MAINSHAFT ASSY	4303404 4303913	1		K-3167
3	62504	ROLL PIN		1		S-2688
4	14750	SNAP RING		5		K-2277,K-2336,K-2410,K-2468,K-3695,K-3726,K-4125
5	4301222	REVERSE GEAR-MAINSHAFT		1		
6	14749	SPACER		4		K-2410
7	14711	WASHER .248-.250 WHITE	18701	5	OPTIONAL 14711-14716 USE ANY 5	

Item	Current Part	Description	Replaced Part	Qty.	Notes	Kits/Assys Where Needed
					WASHERS USE WITH 21326 KEY	
7	14712	WASHER .253-.255 GREEN	18702	5	OPTIONAL 14711-14716 USE ANY 5 WASHERS USE WITH 21326 KEY	
7	14713	WASHER .258-.260 ORANGE	18703	5	OPTIONAL 14711-14716 USE ANY 5 WASHERS USE WITH 21326 KEY	
7	14714	WASHER .263-.265 PURPLE	18704	5	OPTIONAL 14711-14716 USE ANY 5 WASHERS USE WITH 21326 KEY	
7	14715	WASHER .268-.270 YELLOW	18705	5	OPTIONAL 14711-14716 USE ANY 5 WASHERS USE WITH 21326 KEY	
7	14716	WASHER .273-.275 BLACK	18706	5	OPTIONAL 14711-14716 USE ANY 5 WASHERS USE WITH 21326 KEY	
7	4300382	WASHER .249-WHITE		5		K-2366,K-2410,K-3695
7	4300383	WASHER .254-GREEN		5	OPTIONAL 4300382-4300387 OR 4300830 USE ANY 5 WASHERS. USE WITH 3-SIDED KEY	K-2366,K-2410,K-3695
7	4300384	WASHER .259-ORANGE		5	OPTIONAL 4300382-4300387 OR 4300830 USE ANY 5 WASHERS. USE WITH 3-SIDED KEY	K-2366,K-2410,K-3695
7	4300385	WASHER .264-PURPLE		5	OPTIONAL 4300382-4300387 OR 4300830 USE ANY 5 WASHERS. USE WITH 3-SIDED KEY	
7	4300386	WASHER .269-YELLOW		5	OPTIONAL 4300382-4300387 OR 4300830 USE ANY 5 WASHERS. USE WITH 3-SIDED KEY	
7	4300387	WASHER .274-BLACK		5	OPTIONAL 4300382-4300387 OR 4300830 USE ANY 5 WASHERS. USE WITH 3-SIDED KEY	
7	4300830	WASHER .244-BLUE		5		K-2366,K-2410,K-3695,K-3726
8	16118	SLIDING CLUTCH		2		
9	4301220	1ST GEAR-MAINSHAFT	4301219	1		
10	20381	2ND GEAR-MAINSHAFT	19268 ,4302104	1		
11	19622	3RD GEAR-MAINSHAFT	21263 ,4300246	1		
12	23102	OD GEAR-MAINSHAFT	22960 4300190	1		K-3695
13	22032	SPACER		1		K-2410
14	4304317	SLIDING CLUTCH	22026	1		K-2336,K-3695,K-3726
16	4303603	WASHER	4302397	1		K-3167,K-3726
17	4302398	WASHER		2	USE 3-SIDED KEY ONLY	K-3167,K-3726
18	4302393	OD GEAR-MAINSHAFT	4305070	1	USE 3-SIDED KEY ONLY	K-3167,K-3726
19	4302394	3RD GEAR-MAINSHAFT	4302395	1	USE 3-SIDED KEY ONLY	

MISCELLANEOUS

Item	Current Part	Description	Replaced Part	Qty.	Notes	Kits/Assys Where Needed
	20400	SHIFT DIAGRAM LABEL	19301	1		
	71203	SILICONE LUBE		1	8 OZ (236.59 CC)-FLEET SIZE	
	71204	ADHESIVE SEALANT		1	0.5 CC (SINGLE APPLICATION SIZE)	
	71205	SEALANT		1	2 CC (SINGLE APPLICATION SIZE)	K-2336,K-3695,K-3726
	71206	SILICONE LUBE		1	4 CC (SINGLE APPLICATION SIZE)	K-1431,K-1450,K-2428,K-2429,K-2978

Group: NON-SELECTIVE M/S ASSY

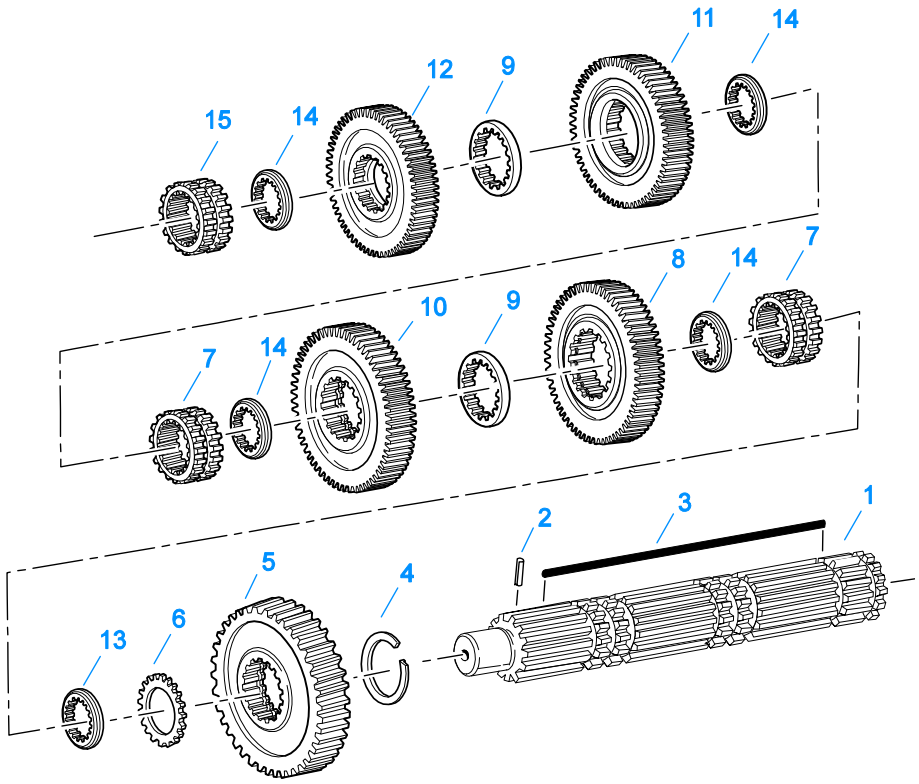

10337B-10-96

NON-SELECTIVE M/S ASSY

Item	Current Part	Description	Replaced Part	Qty.	Notes	Kits/Assys Where Needed
1	S-2688	MAINSHAFT ASSY	4303404 4303913	1		K-3167
2	62504	ROLL PIN		1		S-2688
3	4304614	3-SIDED KEY	4300890	1		K-2366,K-2410,K-3167,K-3695,K-3726
5	14750	SNAP RING		1		K-2277,K-2336,K-2410,K-2468,K-3695,K-3726,K-4125
5	4301222	REVERSE GEAR-MAINSHAFT		1		
6	14749	SPACER		1		K-2410
7	16118	SLIDING CLUTCH		2		
8	4303497	1ST GEAR-MAINSHAFT	4303498	1		K-3167
9	4303603	WASHER	4302397	1		K-3167,K-3726
10	4303428	2ND GEAR-MAINSHAFT	4303411	1		
11	4302394	3RD GEAR-MAINSHAFT	4302395	1		
12	4302393	OD GEAR-MAINSHAFT	4305070	1		K-3167,K-3726
13	4300830	WASHER .244-BLUE		1		K-2366,K-2410,K-3695,K-3726
14	4302398	WASHER		4		K-3167,K-3726
15	4304317	SLIDING CLUTCH	22026	1		K-2336,K-3695,K-3726

Group: OIL COOLER

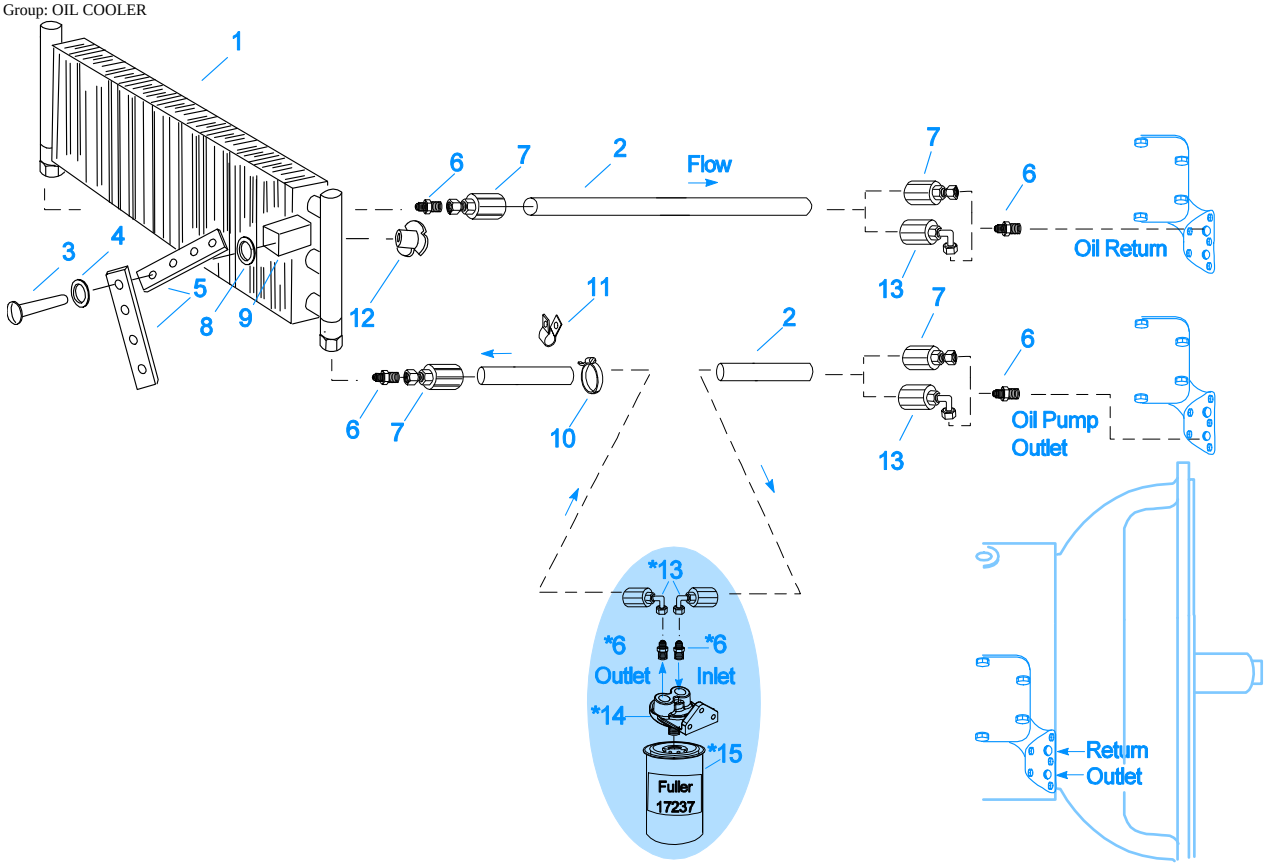

10525-4/92 Cooler

*Adding Oil Filter and parts as shown is optional.

Return / Outlet Location

OIL COOLER

Item	Current Part	Description	Replaced Part	Qty.	Notes	Kits/Assys Where Needed
1	18025	OIL COOLER		1		K-1956
2	19424	HOSE		1	25 FEET	K-1956
3	X-8-535	CAPSCREW		2	5/16"-16X2-1/2"	
4	X-3-506	LOCKWASHER		2	5/16"	
5	18211	BRACKET		4		K-1956
6	19419	CONNECTOR		6		K-1956,S-1404
7	19415	SWIVEL		4		K-1956
8	X-10-501	WASHER		2	5/16"	
9	18209	PLUG-RUBBER MOUNT		2		K-1956
10	17190	STRAP		8		K-1956
11	19423	CLAMP		5		K-1956
12	18210	NUT		2		K-1956
13	19422	ELBOW		4		K-1956
14	S-1404	OIL FILTER	17238	1		
15	17237	FILTER ELEMENT		1		S-1404

Group: RANGE CYLINDER

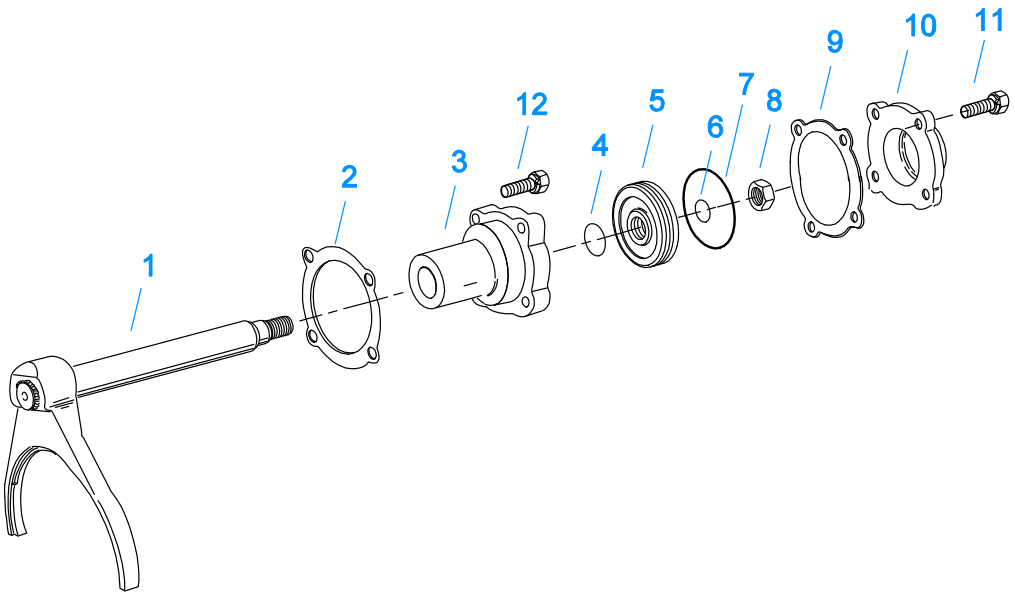

10461-2/92 Rng Cyl

RANGE CYLINDER

Item	Current Part	Description	Replaced Part	Qty.	Notes	Kits/Assys Where Needed
1	A-5474	SHIFT YOKE ASSY		1		
2	14347	GASKET		1		K-1431,K-2061,K-2327
3	16778	AUXILIARY CYLINDER		1		K-1431
4	14765	-O- RING		1		K-1431,K-1450
5	14341	PISTON	23353	1		K-1431
6	14345	-O- RING		1		K-1431,K-1450
7	14344	-O- RING		1		K-1431,K-1450
8	X-1-1010	NUT		1	5/8"-18	
9	14349	GASKET		1		K-1431,K-1450,K-2061,K-2327
10	19690	CYLINDER COVER		1		
11	X-8L-604	CAPSCREW		4	3/8" - 16X1-1/4"	
12	X-8L-600	CAPSCREW		4	3/8"-16X1"	

Group: REVERSE IDLER

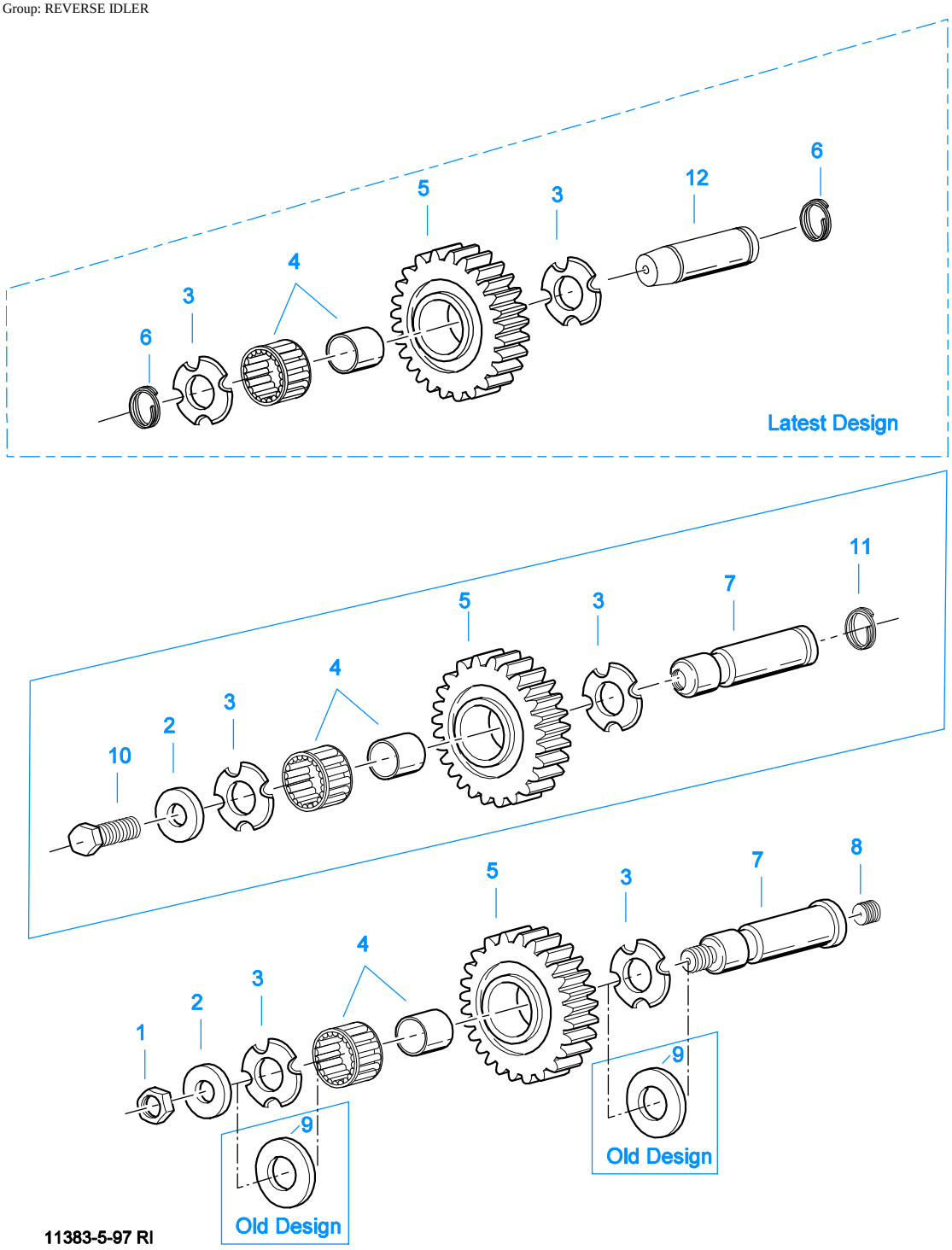

REVERSE IDLER

Item	Current Part	Description	Replaced Part	Qty.	Notes	Kits/Assys Where Needed
1	X-1-1008	NUT		2	5/8"-18	
2	14283	WASHER		2		
3	4302982	WASHER	14282	4		K-3209,S-1736,S-1826
4	14287	BEARING	4305020	2		K-2277,K-2336,K-3695,K-3726
5	4301229	REVERSE IDLER GEAR		2		
6	4303336	RETAINING RING		4		K-3209,K-3695,K-3726
7	K-3209	IDLER SHAFT REPL KIT	16405 ,4302981 ,4305513	2		

Item	Current Part	Description	Replaced Part	Qty.	Notes	Kits/Assys Where Needed
8	5202	PLUG		2		
9	14282	NO LONGER AVAILABLE		4		
10	X-7-1008	CAPSCREW		2	5/8"-18X1-1/4	
11	4303336	RETAINING RING		2		K-3209,K-3695,K-3726
12	4305513	IDLER SHAFT		2		K-3209

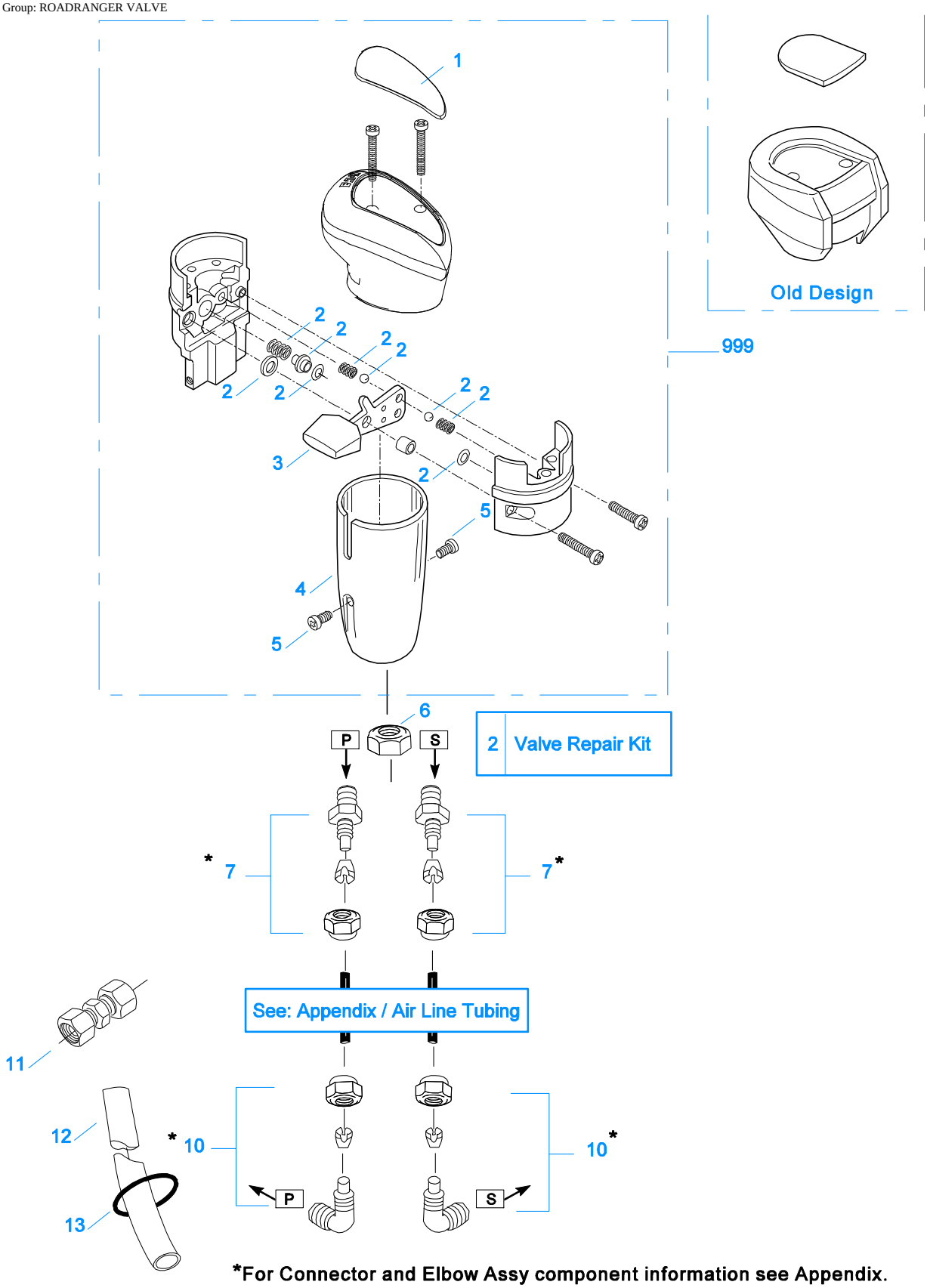

*For Connector and Elbow Assy component information see Appendix.

10100A-3-97 RRV-2

ROADRANGER VALVE

Item	Current Part	Description	Replaced Part	Qty.	Notes	Kits/Assys Where Needed
1	5586100	MEDALLION, LOGO		1	(LATEST DESIGN) FULLER LOGO ONLY	A-6909
1	5586106	SHIFT DIAGRAM MEDALLION		1	RT	S-2543
2	K-1921	MASTER VALVE REPAIR KIT		1	FOR A-6909 & A-5010 VALVES	
3	20495	LEVER		1		A-6909
4	20112	COVER		1		A-6909
5	X-8-213	SCREW	X 8 202	2	8-32X3/8"	
6	X-9-802	NUT		1	1/2"-13	
7	84001	CONNECTOR ASSY	82501	2	1/8"TUBE-1/16"NPTF	
7	84003	CONNECTOR ASSY	82503	2	5/32"TUBE-1/16"NPTF	
7	84005	CONNECTOR ASSY		2	"PUSH-TO-CONNECT" 5/32"TUBE-1/16"NPTF	
10	85001	ELBOW ASSY	84501	2	5/32"TUBE-1/8"NPTF	K-2336,K-3695,K-3726
10	85002	ELBOW ASSY	84502	2	1/8"TUBE-1/8"NPTF	
10	85003	ELBOW ASSY		2	"PUSH-TO-CONNECT" 5/32"TUBE-1/8"NPTF	
11	84101	UNION ASSY		1	1/8" TUBING	
11	84102	UNION ASSY		1	5/32" TUBING	
11	84103	UNION ASSY		1	"PUSH-TO-CONNECT" 5/32" TUBING	
12	80120	SHEATHING (50 FT ROLL)		1	5/32"-BLACK 50'	
13	13571	-O- RING CLAMP		2		
999	A-6909	ROADRANGER VALVE ASSY	A - 5010 ,A - 5310	1	STANDARD-W/LOGO	
999	S-2543	ROADRANGER VALVE ASSY	A - 5043	1	RT - W/SHIFT DIAGRAM MEDALLION	

Group: SHIFT BAR HOUSING

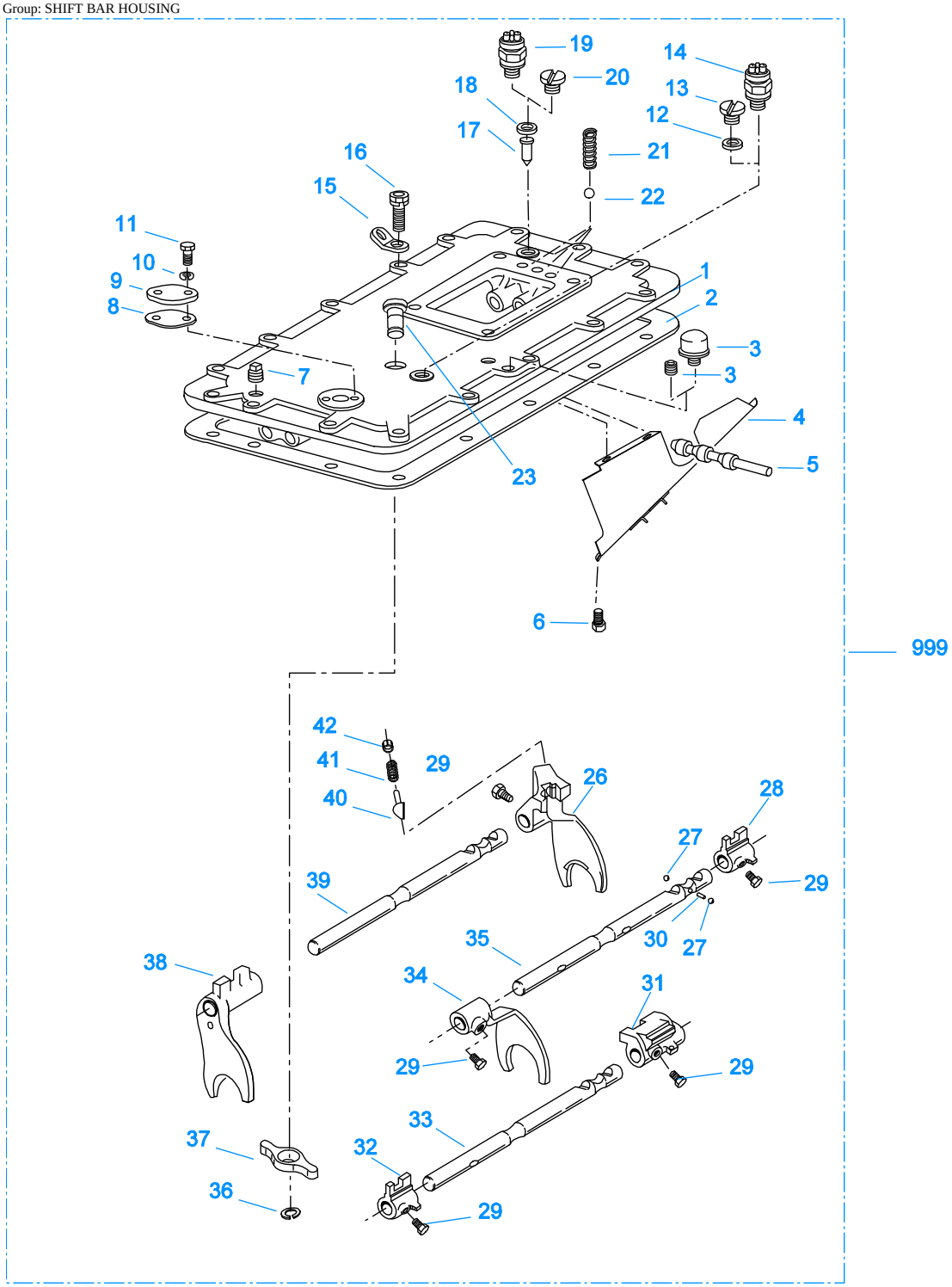

10244-11-96 X-Bar

SHIFT BAR HOUSING

Item	Current Part	Description	Replaced Part	Qty.	Notes	Kits/Assys Where Needed
1	S-1445	SHIFT BAR HSG	18920 ,20135 ,20214 ,20215 ,20487 21135 ,4302452	1	HOUSING ONLY (X)	
2	4302676	GASKET	14918	1		K-2061,S-1527
3	4304602	BREATHER	23605	1	1/4" NPT	K-3695,K-3726
3	X-12-404	PIPE PLUG		1	1/4" NPT	
4	20070	OIL TROUGH		1		S-1527

Item	Current Part	Description	Replaced Part	Qty.	Notes	Kits/Assys Where Needed
5	20332	AIR VALVE SHAFT	17177	1		S-1527
6	X-8-423	CAPSCREW		2	1/4"-20X1/2"	
7	X-12-603	PIPE PLUG	X12 602	1	3/8" NPT	
8	20209	GASKET		1		K-2061,S-1445,S-1527
9	20199	PLATE	18724	1		S-1445,S-1527
10	X-3-400	LOCKWASHER		2	1/4"	
11	X-8-406	CAPSCREW		2	1/4"-20X3/4"	
12	17179	GASKET		1		S-1445,S-1527
13	4303655	PLUG	17178	1		S-1445,S-1527
14	22941	NEUTRAL LIGHT SWITCH	12639	1	SWITCH NORMALLY CLOSED	
15	20815	LIFTING EYE	17105	2		
16	X-8L-602	CAPSCREW		2	3/8"-16X1-1/2"	
16	X-8L-604	CAPSCREW		16	3/8"-16X1-1/4"- OR USE 14 PCS OF X-8L-604 WITH 2 PCS OF X-8L-602	
17	15899	PIN		1		S-1445,S-1527
18	15900	GASKET		1		S-1445,S-1527
19	22940	REVERSE LIGHT SWITCH	16830	1	SWITCH NORMALLY OPEN	
20	4303656	PLUG	15917	1		S-1445,S-1527
21	15918	SPRING		3		K-2336,K-2410,K-3695,K-3726,S-1527
22	X-14-800	STEEL BALL		3	1/2"	
23	K-3104	ACTUATOR PIN KIT	4303287	1		
26	16131	SHIFT YOKE		1	REVERSE/LO	S-1219,S-1527
27	X-14-1200	STEEL BALL		2	3/4"	
28	14658	SHIFT BLOCK		1	1ST/2ND	S-1527
29	3220	LOCKSCREW		5		S-1527
30	1634	INTERLOCK PIN		1		K-2410,S-1527
31	19063	SHIFT BLOCK		1	3RD/OD	S-1527
32	20120	SHIFT BLOCK	18924	1	3RD/OD	S-1527
33	18928	YOKE BAR	4302760	1	3RD/OD	S-1527
34	18922	SHIFT YOKE		1	1ST/2ND	S-1527
35	18927	YOKE BAR		1	1ST/2ND	S-1527
36	4302070	SNAP RING		1		K-3104,K-3726,S-1527
37	4303225	ACTUATOR		1		S-1527
38	4305575	SHIFT YOKE	20450	1	3RD/OD	K-3695,K-3726,S-1527
39	18926	YOKE BAR		1	REVERSE/LO	S-1527
40	10019	PLUNGER		1		S-1219,S-1527
41	6392	SPRING		1		K-2410,S-1219,S-1527
42	8968	PLUG		1		S-1219,S-1527
999	S-1527	SHIFT BAR HSG ASSY	20215 ,21135 ,4302452	1	COMPLETE (X)	

Group: SLAVE VALVE - 19470

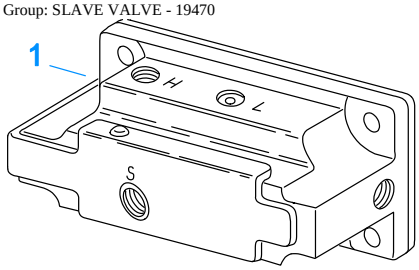

10121-1/92 19470 SV

SLAVE VALVE - 19470

Item	Current Part	Description	Replaced Part	Qty.	Notes	Kits/Assys Where Needed
1	K-2424	VALVE REPLACEMENT KIT	19470	1		

Group: SLAVE VALVE - A-5000

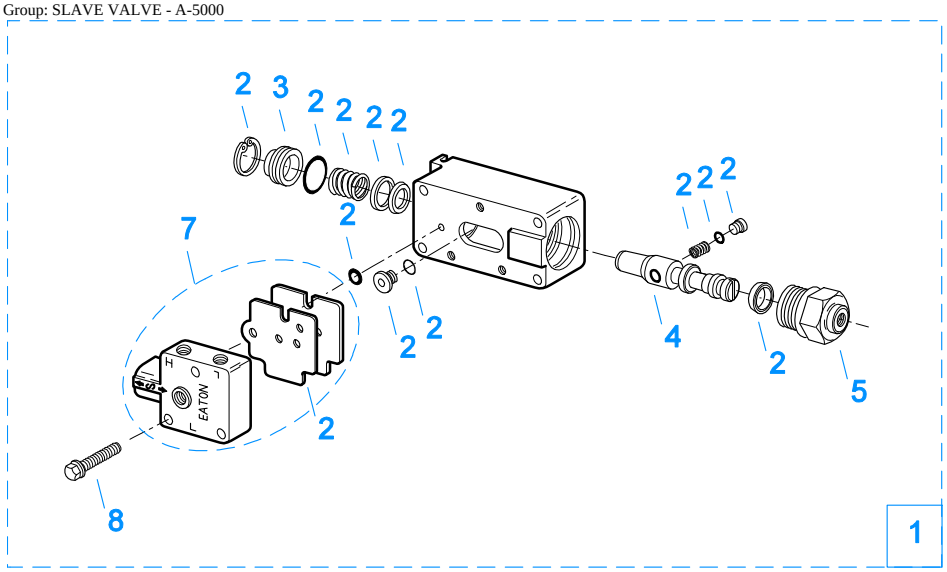

10120-10-97 A-5000 SV

SLAVE VALVE - A-5000

Item	Current Part	Description	Replaced Part	Qty.	Notes	Kits/Assys Where Needed
1	A-5000	SLAVE VALVE ASSY	20850	1		K-2424,K-3695,K-3726
2	K-1935	REPAIR KIT-SLAVE VALVE		1	FOR A-5000 VALVE	
3	20855	PLUG		1		A-5000
4	20854	PISTON		1		A-5000
5	20849	CAP	15131	1		A-5000
7	S-1516	CAP ASSY	20851 ,20853	1		
8	X-8C-413	CAPSCREW		3	1/4"-20X1-1/2"	