Roadranger® More time on the road®

Illustrated Parts List

RTO-16910B-DM3
July 2011

For parts or service call us
Pro Gear & Transmission, Inc.

1 (877) 776-4600

(407) 872-1901

parts@eprogear.com

906 W. Gore St.

Orlando, FL 32805

Contents

How To Use The Illustrated Parts List **3**

AUXILIARY DRIVE GEAR **4**

CASE (AUX) **5**

CASE (FRONT) **7**

CONTROLLER ECU & HARNESS **9**

COUNTERSHAFT & BRGS (AUX) **10**

COUNTERSHAFT ASSY **11**

FILTER REGULATOR **12**

HARNESS MOUNTING BRACKETS **13**

INERTIA BRAKE **15**

INPUT SHAFT & DRIVE GEAR **16**

INTEGRAL OIL PUMP **17**

KITS & ASSEMBLIES **19**

MAINSHAFT & SYNCHRO(AUX) **20**

MAINSHAFT ASSY **21**

MISCELLANEOUS **22**

OIL COOLER **23**

RANGE CYLINDER **24**

REVERSE IDLER **25**

SHIFT BAR HOUSING **27**

SHIFT CONTROLS **28**

X-Y SHIFTER MODULE **29**

How To Use The Illustrated Parts List

The information contained in this document is subject to frequent updates. Therefore, for the latest information available, please visit the interactive Electronic Parts Catalog at www.roadranger.com/epc.

Model Designation or Nomenclature

- For information regarding Model Designation and Nomenclature, visit www.roadranger.com.

Kits and Assemblies (K/A's)

- Kits and Assemblies contain groups of individual or assembled parts developed for optimal replacement or repair of a service problem.
- Kits and Assemblies are shown with applicable parts groupings in the parts listings.

Identifying Kits and Assemblies

A- Part numbers beginning with the letter 'A' are pre-assembled Production Assemblies
K- Part numbers beginning with the letter 'K' are kits that are not assembled
S- Part numbers beginning with the letter 'S' are pre-assembled Service Assemblies

- Note: Some Production Assemblies do not begin with a letter prefix (Midrange only).

Illustrations

- Illustrations show parts in assembly groups.
- Item numbers on illustrations correspond with parts listings on pages adjacent to the illustration.
- Notes are included on illustrations where additional information is needed.

Parts Listing

Parts listings are defined by parts groupings and are broken down by service assemblies. Parts listings identify a part for servicing with the following categories

- **Item Number** - corresponding with numbers on illlustrations for part identification.
- **Current Part** - indentifies part as it is available for service.
- **Description** - specifies part name or description.
- **Replaced Part** - quantity quantity required for assembly.
- **Quantity** - defines unique characteristics or requirements.
- **Notes** - indicates Kits or Assemblies that contain a particular part.
- **Kits/Assy's Where Used**

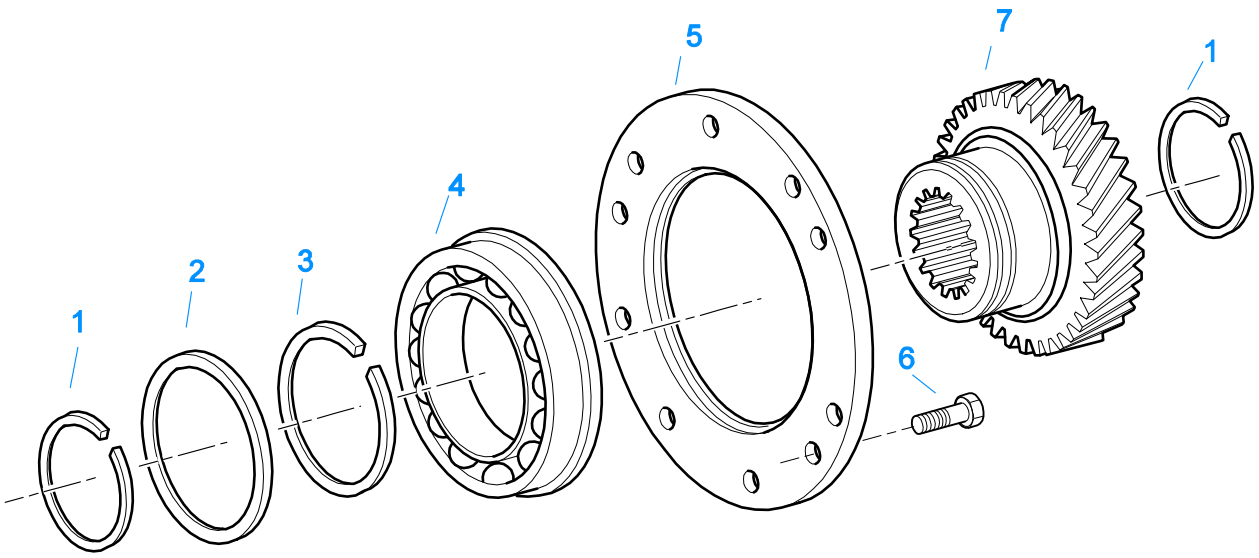

10480-12/92 Aux DG

AUXILIARY DRIVE GEAR

Item	Current Part	Description	Replaced Part	Qty.	Notes	Kits/Assys Where Needed
1	16763	SNAP RING		2		K-3519,K-3522
2	21320	SNAP RING RETAINER		1		K-3519,K-3522
3	16628	SNAP RING		1		
4	5566507-BOX	BEARING	5566504,5566507	1		K-3519,K-3522
5	16138	BEARING RETAINER		1		
6	X-8-645	CAPSCREW	X 8 612	6	3/8"-16X1"	
7	23159	AUXILIARY DRIVE GEAR	21321	1		

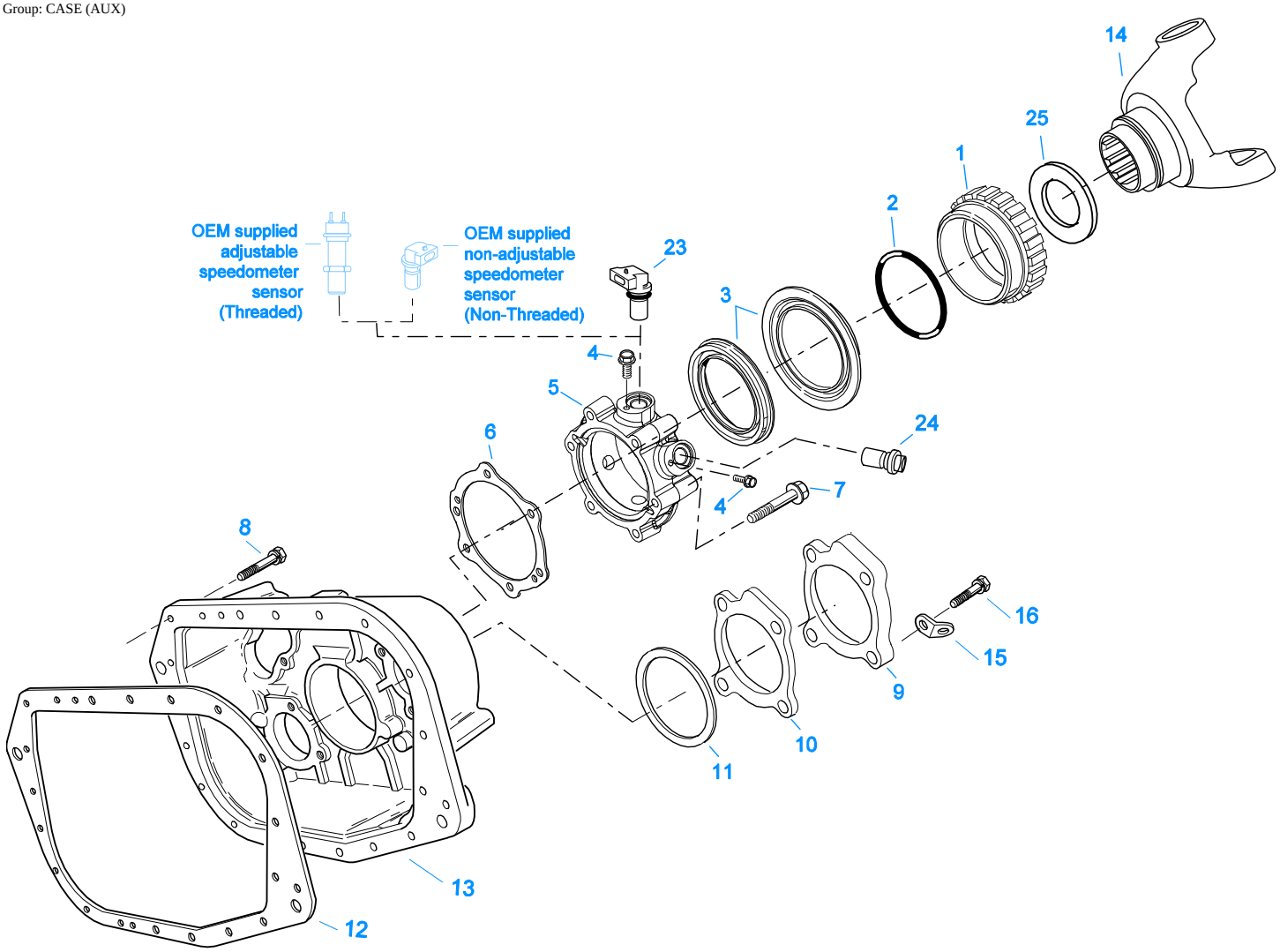

11406B-03-03

CASE (AUX)

Item	Current Part	Description	Replaced Part	Qty.	Notes	Kits/Assys Where Needed
1	S-2501	SPEEDO ROTOR ASSY	4302242	1	MAGNETIC	
2	5568511	-O- RING		1		K-2918,S-2501,S-2913,S-2956
3	K-2918	OIL SEAL KIT	4302322 4302323	1	"FOR MAGNETIC COVER"	K-3519,K-3522
4	X-8-0801M	CAPSCREW		3	M8 X 1.25 X 12MM	

Item	Current Part	Description	Replaced Part	Qty.	Notes	Kits/Assys Where Needed
5	S-2913	REAR BEARING COVER ASSY	691637 ,4304651 ,4305833	1		
6	1009551	GASKET - RED EDGE MOLDED		1	RED EDGE MOLDED GASKET - UNCOMPRESSED THICKNESS .043 - .051 - NOT INTERCHANGEABLE WITH ANY OTHER GASKET	K-2918,K-3518,S-2913
6	4302247	GASKET - PURPLE EDGE MOLDED		1	NON EDGE MOLDED GASKET - UNCOMPRESSED THICKNESS - .013 - .018 - NOT INTERCHANGABLE WITH ANY OTHER GASKET	K-2918,K-3518
7	X-8L-611	CAPSCREW		4	3/8"-16X3-1/4"	
7	X-8L-614	CAPSCREW		2	3/8"-16X2"	
8	X-8L-602	CAPSCREW		16	3/8"-16X1-1/2"	
8	X-8L-614	CAPSCREW		2	3/8"-16X2"	
8	X-8L-616	CAPSCREW	X 8 616	1	3/8"-16X2-3/4"	
9	4302320	COVER	21346	2		S-2956
10	4305978	GASKET	4302246	2		K-3518,S-2956
11	K-2805	SHIM KIT	21452 K - 2106	1		K-3519,K-3522,S-2956
12	14335	GASKET		1		K-3518,S-2956
13	4305046	REAR HOUSING		1		
14	5505543	YOKE-1710 HALF ROUND		1		
15	20815	LIFTING EYE	17105	2		S-2956
16	X-8L-600	CAPSCREW		8	3/8"-16X1"	
23	K-3231	SPEED SENSOR KIT	A - 6398 ,A - 6724	1	SINGLE PICK-UP (2 PIN)	
24	K-3523	SPEEDO PLUG KIT	4302707	2		
25	4304653	SHIELD		1		S-2913

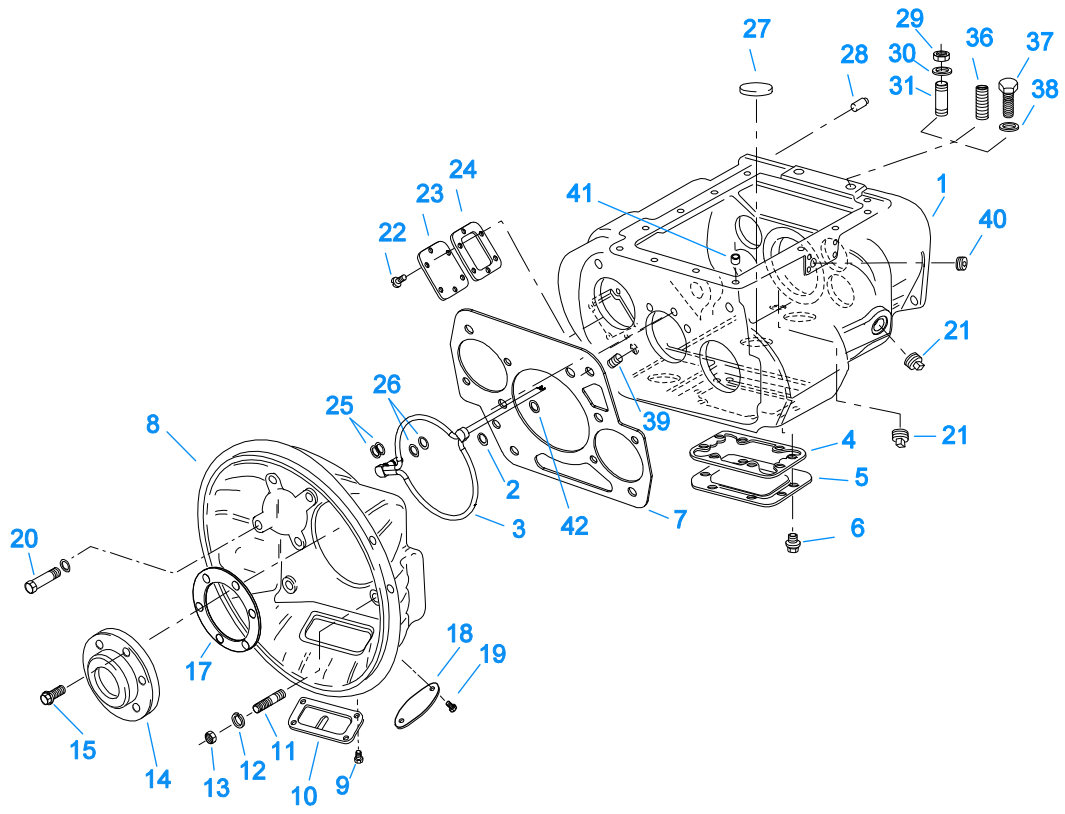

10305E-08-04

CASE (FRONT)

Item	Current Part	Description	Replaced Part	Qty.	Notes	Kits/Assys Where Needed
1	S-3017	CASE ASSEMBLY	4305693	1		
2	5568544	-O- RING		1		
3	A-7471	EXTENDED LUBE TUBE ASSY	4305393	1		
4	4305310	GASKET	4302810	1		K-3518,K-3637,K-3644
5	4302809	PTO COVER	16596 ,4300571	1		
6	X-8-725	CAPSCREW	X 8 724	8	7/16"-14X7/8"	
7	4306584	CLUTCH HOUSING GASKET	4304815,4305668	1		K-3518,K-3760
8	K-3760	FORCED LUBE CL HSG KIT	4304328, 4305819, 4305751	1	#1 PULL ALUMINUM	
9	X-8-1200M	CAPSCREW		4	M12 X 1.75 X 20MM	
10	K-3643	CLUTCH HOUSING COVER KIT	691954	1		
11	4306583	STUD	5966	6		
12	X-10-1005	WASHER	X 3 1000 ,X10 1000 ,X10 1004	6	1.23 X 6.60	
13	X-1-1012	HEX NUT	X-1-1005	6	.625-18	
14	20550	FRONT BRG COVER		1	2" PULL	
15	X-8L-604	CAPSCREW		6	3/8"-16X1-1/4"	
17	14311	GASKET		1		K-3518
18	4303692	HAND HOLE COVER		1	SEE PART MARKING ON COMPONENT PRIOR TO ORDERING TO ENSURE THAT THE PROPER SIZE HAND HOLE CAVER IS ORDERED	K-3760
18	4305365	HAND HOLE COVER		1	SEE PART MARKING ON COMPONENT PRIOR TO ORDERING TO ENSURE THAT THE PROPER SIZE HAND HOLE CAVER IS ORDERED	

Item	Current Part	Description	Replaced Part	Qty.	Notes	Kits/Assys Where Needed
19	X-8-423	CAPSCREW		2	1/4"-20X1/2"	K-3760
20	X-8C-830	HEX HEAD SCREW/WASHER ASSY	X-8C-826	6	.500-13 X 1.490	K-3760
21	4304023	PLUG	4303747	2	1-1/16" MAGNETIC, O-RING INCLUDED	
22	X-8-686	CAPSCREW		6	3/8"-16X3/4"	
23	14575	PTO COVER	4302254	1		
24	4305309	GASKET	1684	1		K-3518,K-3637,K-3644,K-3739
25	13835	-O- RING		2		
26	13653	-O- RING		2		K-2908
27	14373	MAGNET		3		S-3017
28	18128	PIN		2		
29	X-1-1012	HEX NUT		2	.625-18	
30	X-10-1005	WASHER	X 3 1000 ,X10 1000 ,X10 1004	2	1.23 X 6.60	
31	14554	STUD	1632 ,6579	2	5/8" X 2-3/16"	
36	23104	PLUG	1712	2		
37	X-8-1005	CAPSCREW		2	5/8"-11X1-1/4"	
38	20814	SPACER		2		
39	X-12-802	PIPE PLUG	X12 800	1	1/2"	
40	X-12-1212	PIPE PLUG		1		
41	691447	PIN		1		S-3017
42	13834	-O- RING		1		

Group: CONTROLLER ECU & HARNESS

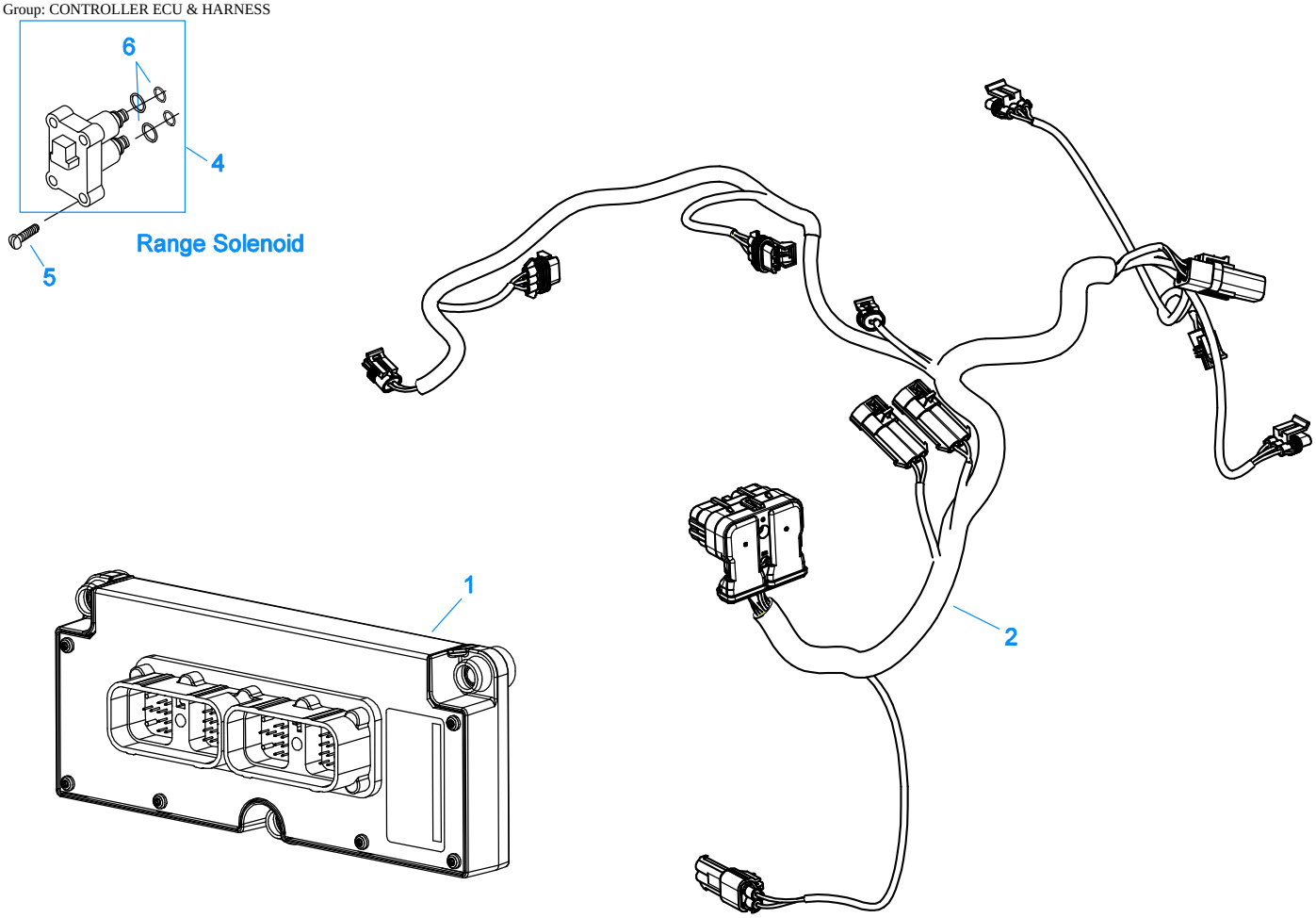

20322-10-05

CONTROLLER ECU & HARNESS

Item	Current Part	Description	Replaced Part	Qty.	Notes	Kits/Assys Where Needed
1	K-3708RX	REMAN EXCH TRANS CONTROLLER KIT	K-3708	1		
2	K-3681	TRANS HARNESS KIT	4305915	1		
4	K-3682	RANGE/SPLITTER VALVE KIT	5561801 ,5561804 ,K - 2907	1		
5	X-8-264	HEX FLANGE HEAD SCREW	X 8 259	4	#10-24 X 1 1/4	
6	K-2908	-O- RING KIT		1	FOR SOLENOID VALVE	

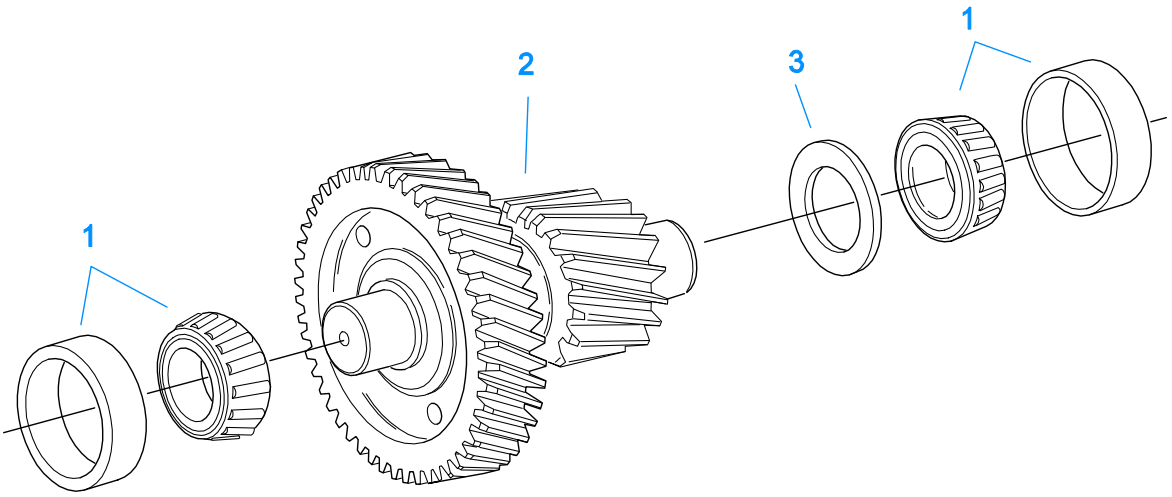

10440-1/92 Aux CS Helical

COUNTERSHAFT & BRGS (AUX)

Item	Current Part	Description	Replaced Part	Qty.	Notes	Kits/Assys Where Needed
1	4302074-BOX	BEARING	21343,4302074	4		K-3519,K-3522
2	A-6338	WELDED COUNTERSHAFT ASSY	A - 5626	2	C/S 4302093 - D/G 23160	
3	21342	SPACER		2		

Group: COUNTERSHAFT ASSY

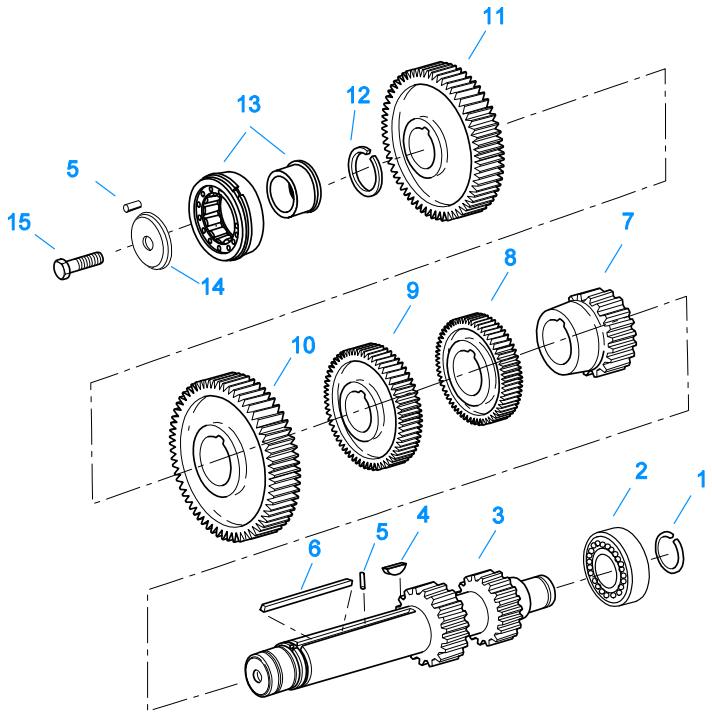

10341-1/92 CS/RT

COUNTERSHAFT ASSY

Item	Current Part	Description	Replaced Part	Qty.	Notes	Kits/Assys Where Needed
1	14317	SNAP RING		2		K-3519,K-3522
2	14366	BEARING		2		K-3519,K-3522
3	4303621	CNTRSHFT-W/REV & 1ST	4303619	2		
4	X-6-E	KEY		2		
5	62511	ROLL PIN		4		
6	4304840	KEY	19673	2		
7	4306076	2ND GEAR-CNTRSHFT	19247,20471	2		
8	20482	3RD GEAR-CNTRSHFT	19615	2		
9	4305052	OD GEAR-CNTRSHFT	4302089	2		
10	15953	PTO GEAR - LOWER		1		
10	20840	PTO GEAR - UPPER	15952	1		
11	4305657	DRIVE GEAR-CNTRSHFT	19240 ,19243 ,20392 ,4302087,21020	2		
12	19198	SNAP RING		2		
13	4304599	BEARING	4302677 4304598	2		K-3519,K-3522
14	4304605	RETAINER	19548	2	ROLL PIN NO LONGER REQUIRED	
15	X-7-1005	CAPSCREW		2	5/8"-18X1-3/4"	

Group: FILTER REGULATOR

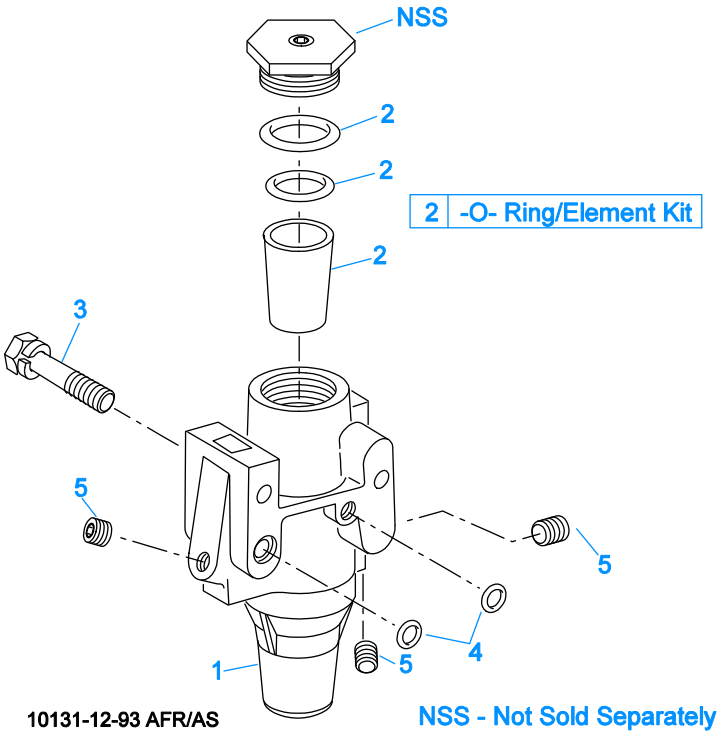

FILTER REGULATOR

Item	Current Part	Description	Replaced Part	Qty.	Notes	Kits/Assys Where Needed
1	K-2170	FILTER REG KIT	A - 5454	1		
2	K-1698	-O- RING/ELEMENT KIT		1	FOR FILTER REGULATOR	
3	X-8C-412	CAPSCREW	X 8S 412	2	1/4"-20X2-1/4"	
4	15114	-O- RING		2		K-2170,K-3365,K-3484
5	X-12-208	PIPE PLUG		3	1/8" NPT	

Group: HARNESS MOUNTING BRACKETS

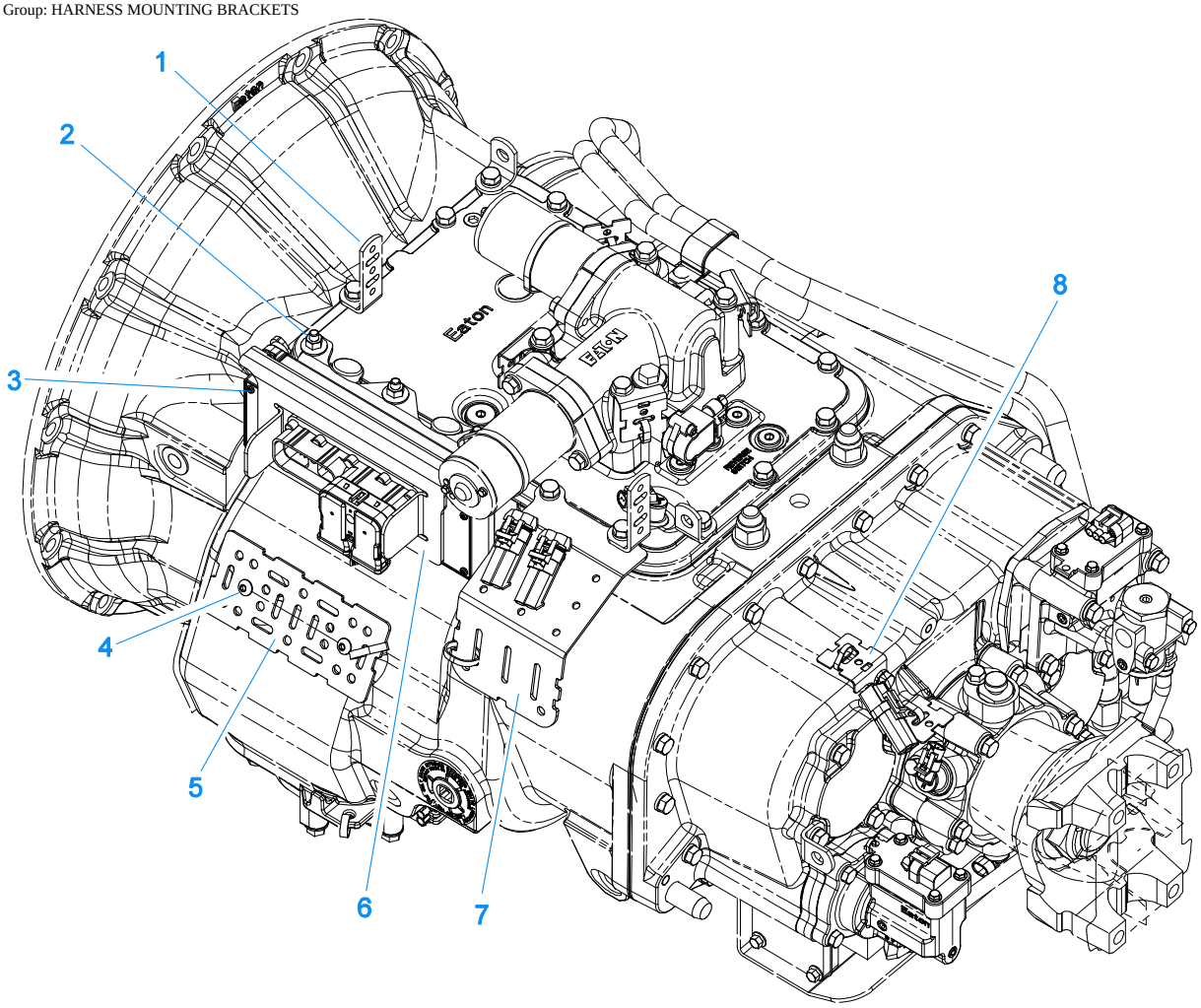

20323-07-06

HARNESS MOUNTING BRACKETS

Item	Current Part	Description	Replaced Part	Qty.	Notes	Kits/Assys Where Needed
1	4305801	STRAIN RELIEF BRACKET		1		
2	4305870	NUT ASSEMBLY		3	5/16-18	K-3734
3	4305919	NUT ASSEMBLY		3	(1/4-20)	K-3734
4	X-8-561	BUTTON HEAD SCREW		2	5/16 X 5/8	
5	4305914	HARNESS BRACKET		1		
6	K-3734	TRANS CONTROLLER MOUNTING KIT		1		
7	4305871	WIRE BRACKET		1		
8	4305794	HARNESS STRAP BRACKET		1		

Group: INERTIA BRAKE

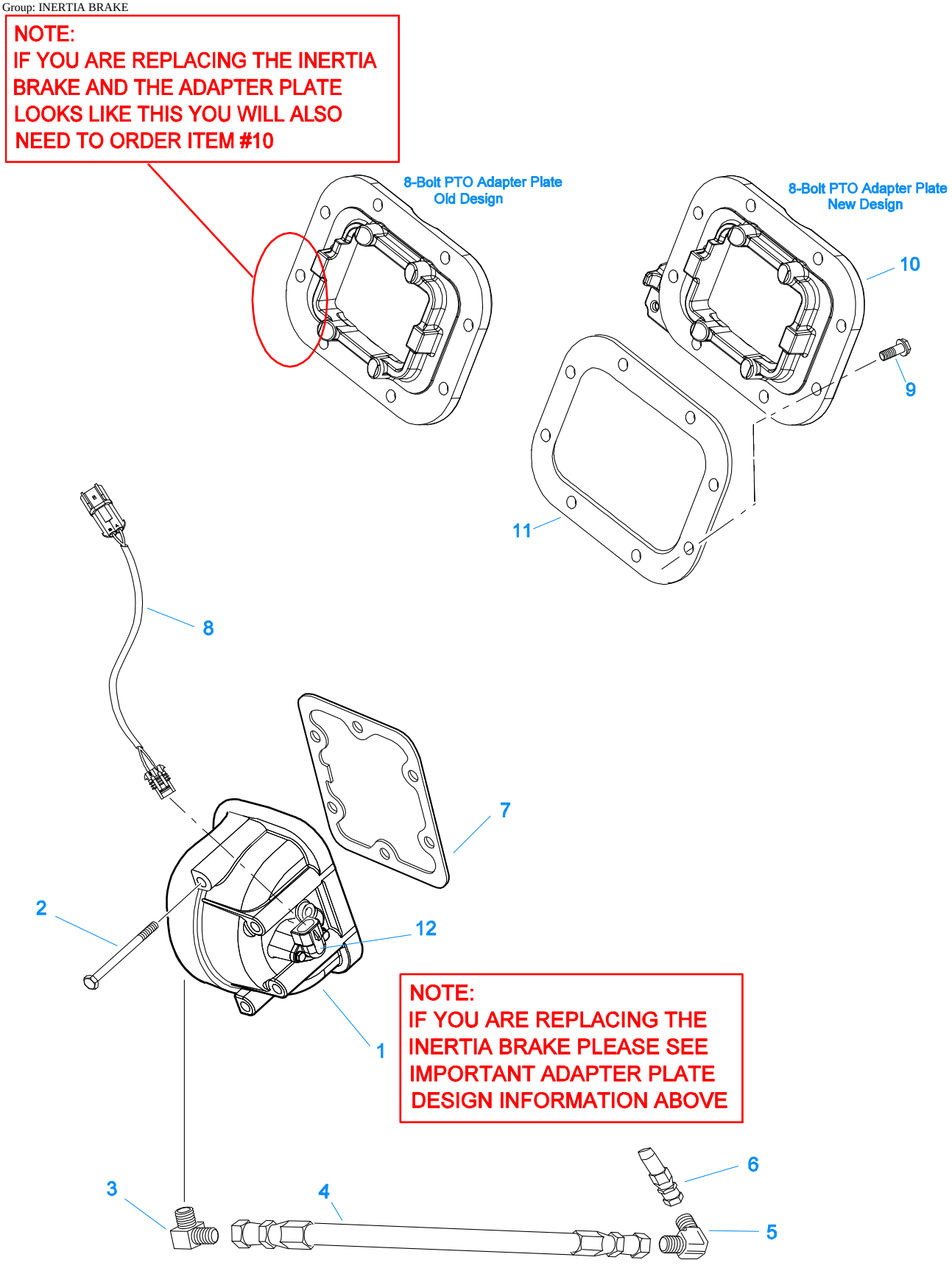

20427-03-03

INERTIA BRAKE

Item	Current Part	Description	Replaced Part	Qty.	Notes	Kits/Assys Where Needed
1	K-3637	INERTIA BRAKE KIT	A - 7452	1	PLEASE SEE IMPORTANT SERVICE INFORMATION INDICATED ON ILLUSTRATION.	
2	X-8-6116	HEX FLANGE HEAD SCREW		6	3/8"-16X4.25	
3	691603	CONN 3/8 PIPE TO3/4 16		1		
4	5588210	OIL HOSE ASSEMBLY		1		
5	691651	ELBOW, 90 DEG MALE		1		
6	4305714	FILTER FITTING		1		
7	4305309	GASKET	1684	1		K-3518,K-3637,K-3644,K-3739
8	K-3739	INERTIA BRAKE RELOCATION KIT		1		
9	X-8C-722	CAPSCREW		8	7/16-14X1-1/4	
10	K-3644	INERTIA BRK ADPT PLT KIT	4305450 ,4305732	1		
11	4305310	GASKET	4302810	1		K-3518,K-3637,K-3644
12	K-3638	I-BRAKE CONNECTOR KIT	691499	1		

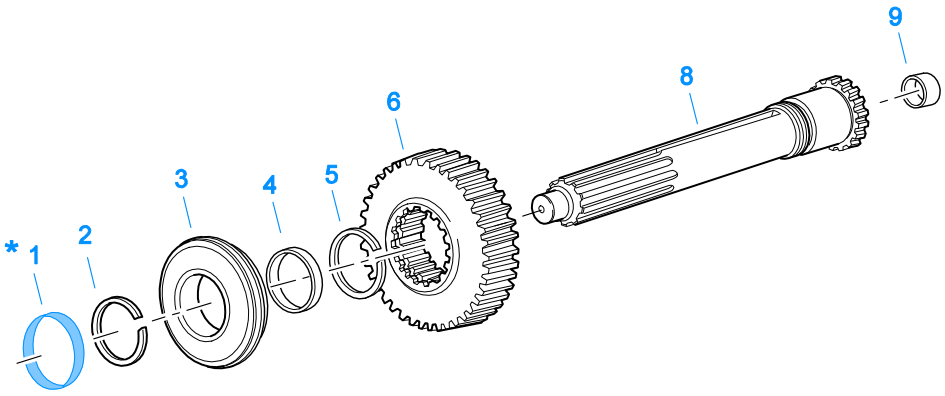

* For Shipping Only -- Do Not Replace

*

10370-1/92 IS

INPUT SHAFT & DRIVE GEAR

Item	Current Part	Description	Replaced Part	Qty.	Notes	Kits/Assys Where Needed
1	23559	SHIPPING SEAL		1	NOT SOLD FOR SERVICE	
2	16980	SNAP RING		1		K-3519
3	81504	BEARING		1		K-3519,K-3522
4	16463	SPACER		1		
5	14750	SNAP RING		1		K-3519,K-3522
6	4305659	MAIN DRIVE GEAR	22030 ,4302086,22028	1		
8	S-1659	INPUT SHAFT	20535 23566 ,4302661	1	USE W/FBC 20550	K-3519
9	16566	BUSHING		1		K-3522,S-1659

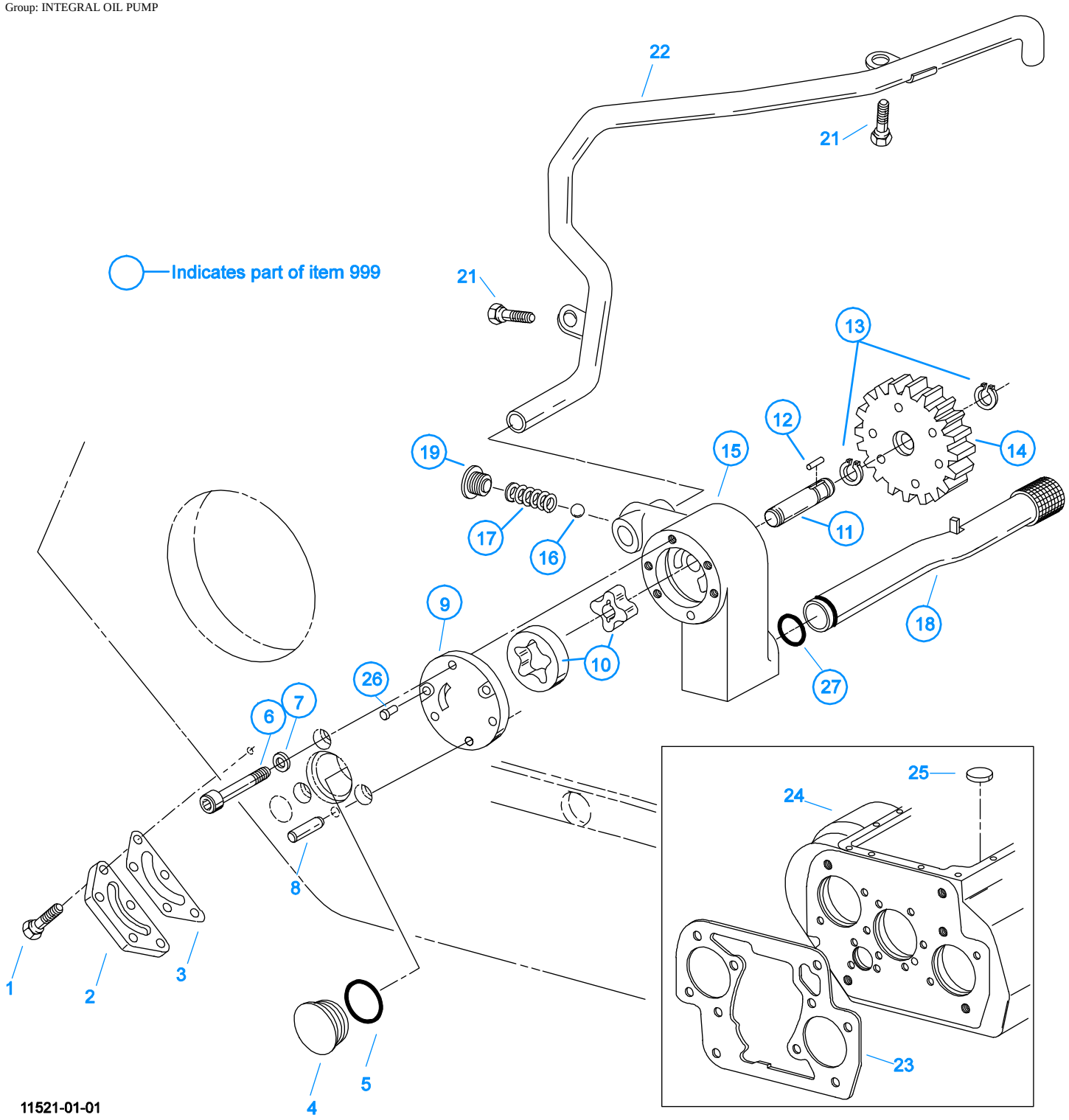

INTEGRAL OIL PUMP

Item	Current Part	Description	Replaced Part	Qty.	Notes	Kits/Assys Where Needed
1	X-8C-409	CAPSCREW		5	1/4"-20X5/8"	
2	K-2402	COVER & SCREW KIT	20513 ,4300751	1		
3	20514	GASKET		1		K-2402
4	20823	PLUG		1		
5	14765	-O- RING		1		K-3484
6	X-8-448	SCREW	X 8 445	3	1/4"-20X1-1/4"	
7	20824	WASHER		3		K-3367

Item	Current Part	Description	Replaced Part	Qty.	Notes	Kits/Assys Where Needed
8	20825	DOWEL PIN		1		
9	4303773	RETAINER		1		
10	K-3367	OIL PUMP KIT	4301829 ,4301948 ,4303776 ,4304529 ,4304572 A - 6963 ,A - 7173	1		
11	K-3367	OIL PUMP KIT	4301829 ,4301948 ,4303776 ,4304529 ,4304572 A - 6963 ,A - 7173	1		
12	20509	KEY		1		
13	14853	SNAP RING		2		
14	4303774	PUMP DRIVE GEAR	4304880	1		
15	K-3367	OIL PUMP KIT	4301829 ,4301948 ,4303776 ,4304529 ,4304572 A - 6963 ,A - 7173	1		
16	X-14-700	STEEL BALL		1	7/16"	
17	4303775	SPRING		1		
18	4305713	SUCTION TUBE	4304628	1	O-RING INCLUDED ON SUCTION TUBE	K-3367
19	4304629	PLUG		1		
21	X-8-686	CAPSCREW		2	3/8"-16X3/4"	
22	4305715	SPLITTER LUBE TUBE	A - 7197	1		
23	4306584	CLUTCH HOUSING GASKET	4304815,4305668	1		K-3518,K-3760
24	S-3017	CASE ASSEMBLY	4305693	1		
25	14373	MAGNET		3		S-3017
26	X-8-447	SCREW		2		
27	20225	-O- RING		1		
999	K-3367	OIL PUMP KIT	4301829 ,4301948 ,4303776 ,4304529 ,4304572 A - 6963 ,A - 7173	1		

KITS & ASSEMBLIES

Item	Current Part	Description	Replaced Part	Qty.	Notes	Kits/Assys Where Needed
	K-1698	-O- RING/ELEMENT KIT		1	FOR FILTER REGULATOR	
	K-1956	COOLER INSTLN KIT		1		
	K-2170	FILTER REG KIT	A - 5454	1		
	K-2402	COVER & SCREW KIT	20513 ,4300751	1		
	K-2805	SHIM KIT	21452 K - 2106	1		K-3519,K-3522,S-2956
	K-2908	-O- RING KIT		1	FOR SOLENOID VALVE	
	K-2918	OIL SEAL KIT	4302322 4302323	1	"FOR MAGNETIC COVER"	K-3519,K-3522
	K-3231	SPEED SENSOR KIT	A - 6398 ,A - 6724	1	SINGLE PICK-UP (2 PIN)	
	K-3365	RANGE CYL COVER KIT	691442	1		
	K-3367	OIL PUMP KIT	4301829 ,4301948 ,4303776 ,4304529 ,4304572 A - 6963 ,A - 7173	1		
	K-3438	POSITION SENSOR KIT	691551 ,691926	1		
	K-3484	O-RING KIT - RANGE		1		K-3519,K-3522
	K-3492	SYNCHRONIZER KIT	K - 2446	1		
	K-3494	SYNCHRONIZER REPLACEMENT KIT	K - 2448	1	SLIDING CLUTCH INCLUDED IN KIT	
	K-3518	GASKET KIT		1		K-3519,K-3522
	K-3519	BASIC OVERHAUL KIT		1		
	K-3522	BASIC REBUILD KIT		1		
	K-3523	SPEEDO PLUG KIT	4302707	1		
	K-3637	INERTIA BRAKE KIT	A - 7452	1		
	K-3638	I-BRAKE CONNECTOR KIT	691499	1		
	K-3643	CLUTCH HOUSING COVER KIT	691954	1		
	K-3644	INERTIA BRK ADPT PLT KIT	4305450 ,4305732	1		
	K-3681	TRANS HARNESS KIT	4305915	1		
	K-3682	RANGE/SPLITTER VALVE KIT	5561801 ,5561804 ,K - 2907	1		
	K-3708RX	REMAN EXCH TRANS CONTROLLER KIT	K-3708	1		
	K-3734	TRANS CONTROLLER MOUNTING KIT		1		
	K-3739	INERTIA BRAKE RELOCATION KIT		1		
	K-3760	FORCED LUBE CL HSG KIT	4304328, 4305819, 4305751	1	#1 PULL ALUMINUM	
	K-3784RX	REMAN EXCH GEN 3 X-Y SHIFTER KIT	A - 7670,K-3665,K-3784	1		
	K-3979	SPACER KIT		1	INCLUDES (4) SPACER MOUNTING SCREWS	
	K-3980	COBRA SHIFT LEVER KIT (RHO)	K-3680	1	(LEFT HAND DRIVE), ALSO KNOWN AS (RHO) RIGHT HAND OPERATION	
	K-3997	COBRA SHIFT LEVER KIT (RHO) W/MACK SWING ARM	A - 7181,K-3680	1	(LEFT HAND DRIVE), ALSO KNOWN AS (RHO) RIGHT HAND OPERATION - FOR UNITS USING THE MACK 10MY559M SWING ARM BRACKET	
	S-1404	OIL FILTER	17238	1		
	S-1659	INPUT SHAFT	20535 23566 ,4302661	1	2" PULL - USE W/FBC 20550	K-3519
	S-2501	SPEEDO ROTOR ASSY	4302242	1	MAGNETIC	
	S-2688	MAINSHAFT ASSY	4303404 ,4303913	1		
	S-2913	REAR BEARING COVER ASSY	691637 ,4304651 ,4305833	1		
	S-2956	RANGE SECTION ASSY		1	"B" RATIO	
	S-3017	CASE ASSEMBLY	4305693	1		
	S-3021	SHIFT BAR HOUSING ASSY	4305895	1	COMPLETE	
	S-3022	SHIFT BAR HOUSING ASSY	4305895	1	HOUSING ONLY	

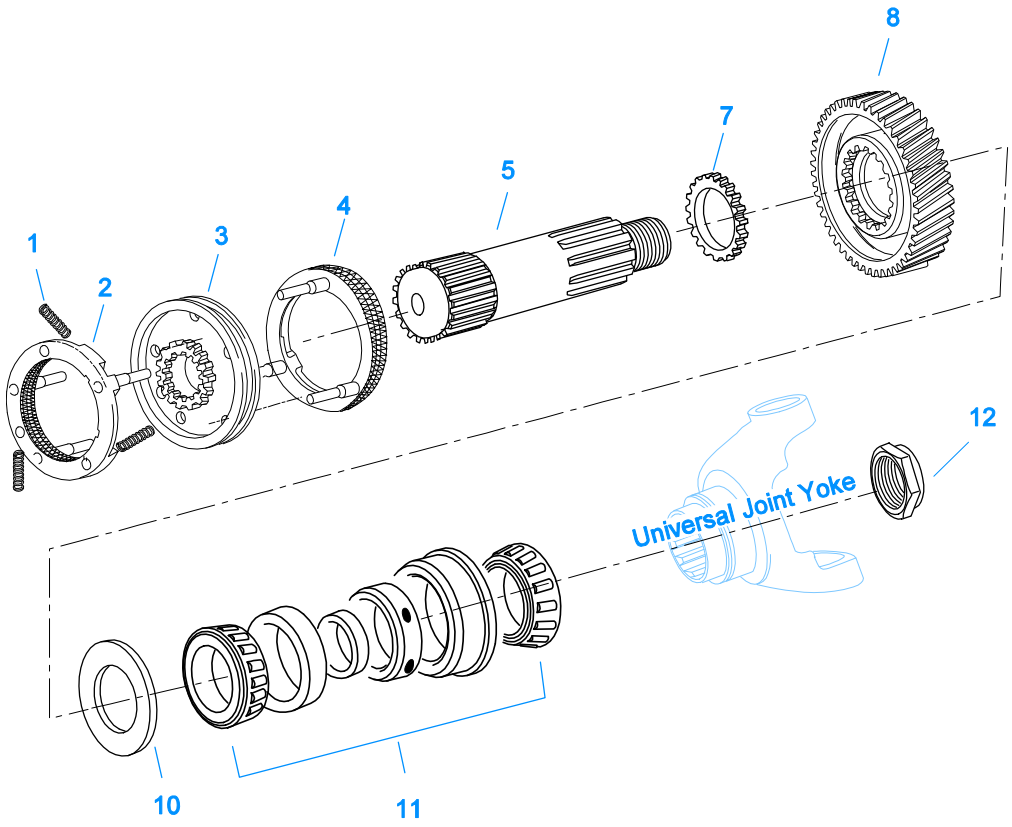

10421A-10-01

MAINSHAFT & SYNCHRO(AUX)

Item	Current Part	Description	Replaced Part	Qty.	Notes	Kits/Assys Where Needed
1	14897	SPRING		3		K-3492,K-3494,K-3519,K-3522
2	A-7331	SYNCHRONIZER ASSY	4304396 4304397 A - 5917	1	HI RANGE	K-3492,K-3494
3	20323	SLIDING CLUTCH		1		K-3494
4	A-7254	SYNCHRONIZER ASSEMBLY	A - 4937 A - 5876	1	LO RANGE	K-3492,K-3494
5	4302276	AUXILIARY MAINSHAFT		1		
7	22899	WASHER		1		
8	4302092	REDUCTION GEAR	23661	1		
10	22898	SPACER		1		
11	5556503-BOX	BEARING	5556503	1		K-3519,K-3522
12	K-4122	HEX FLANGE CRIMPED NUT KIT	4302321,4306520	1		

Group: MAINSHAFT ASSY

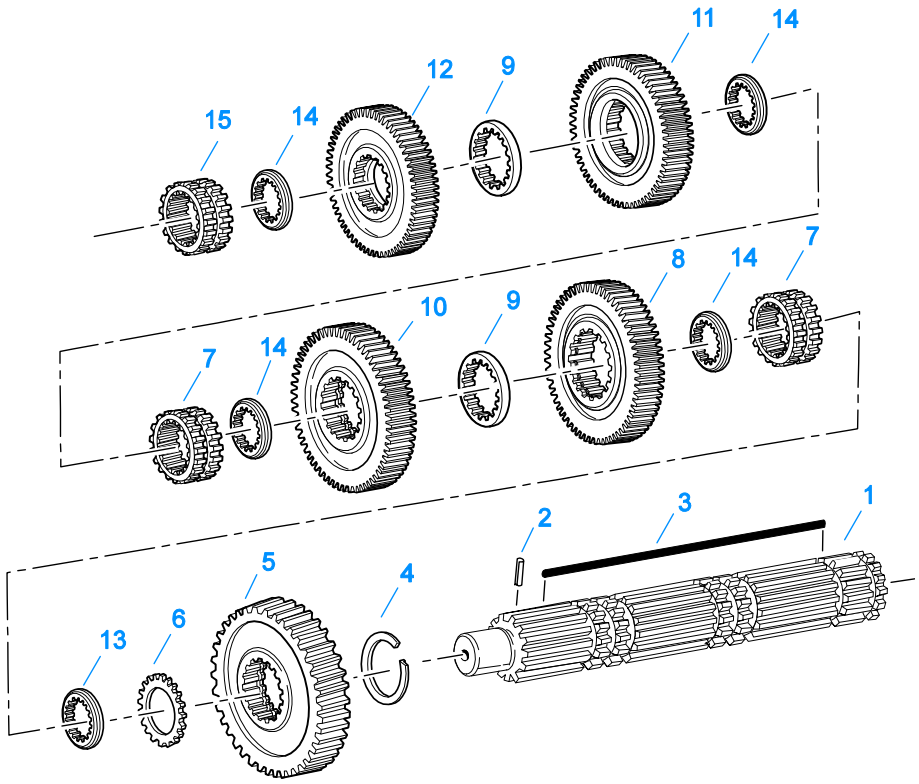

10337B-10-96

MAINSHAFT ASSY

Item	Current Part	Description	Replaced Part	Qty.	Notes	Kits/Assys Where Needed
1	S-2688	MAINSHAFT ASSY	4303404 ,4303913	1		
2	62504	ROLL PIN		1		S-2688
3	4304614	3-SIDED KEY	4300890	1		
4	14750	SNAP RING		1		K-3519,K-3522
5	23653	REVERSE GEAR-MAINSHAFT		1		
6	14749	SPACER		1		
7	4305997	SLIDING CLUTCH	4301407	2		
8	4303620	1ST GEAR-MAINSHAFT	4303618	1		
9	4303603	WASHER	4302397	2		
10	4303477	2ND GEAR-MAINSHAFT	4303414	1		
11	4302384	3RD GEAR-MAINSHAFT	4302385	1		
12	4302381	OD GEAR-MAINSHAFT	4302382 ,4302383	1		
13	4300830	WASHER .244-BLUE		1		
14	4302398	WASHER		4		
15	4305996	SLIDING CLUTCH	691922	1		K-3519

MISCELLANEOUS

Item	Current Part	Description	Replaced Part	Qty.	Notes	Kits/Assys Where Needed
	5586272	SHIFT DIAGRAM LABEL	5586268	1		
	71203	SILICONE LUBE		1	8 OZ (236.59 CC)-FLEET SIZE	
	71204	ADHESIVE SEALANT		1	0.5 CC (SINGLE APPLICATION SIZE)	
	71205	SEALANT		1	2 CC (SINGLE APPLICATION SIZE)	K-3519
	71206	SILICONE LUBE		1	4 CC (SINGLE APPLICATION SIZE)	K-3484

Group: OIL COOLER

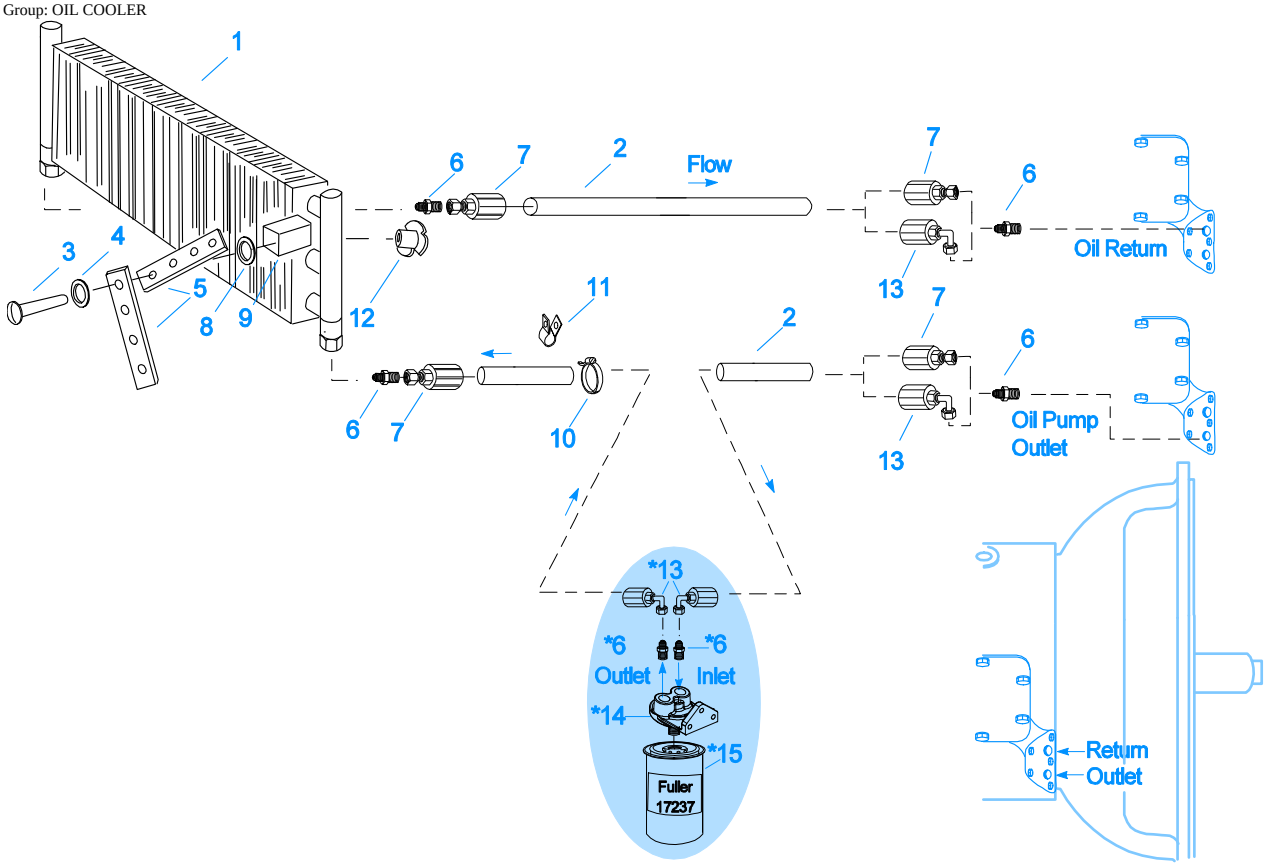

10525-4/92 Cooler

*Adding Oil Filter and parts as shown is optional.

Return / Outlet Location

OIL COOLER

Item	Current Part	Description	Replaced Part	Qty.	Notes	Kits/Assys Where Needed
1	18025	OIL COOLER		1		K-1956
2	19424	HOSE		1	25 FEET	K-1956
3	X-8-535	CAPSCREW		2	5/16"-16X2-1/2"	
4	X-3-506	LOCKWASHER		2	5/16"	
5	18211	BRACKET		4		K-1956
6	19419	CONNECTOR		6		K-1956,S-1404
7	19415	SWIVEL		4		K-1956
8	X-10-501	WASHER		2	5/16"	
9	18209	PLUG-RUBBER MOUNT		2		K-1956
10	17190	STRAP		8		K-1956
11	19423	CLAMP		5		K-1956
12	18210	NUT		2		K-1956
13	19422	ELBOW		4		K-1956
14	S-1404	OIL FILTER	17238	1		
15	17237	FILTER ELEMENT		1		S-1404

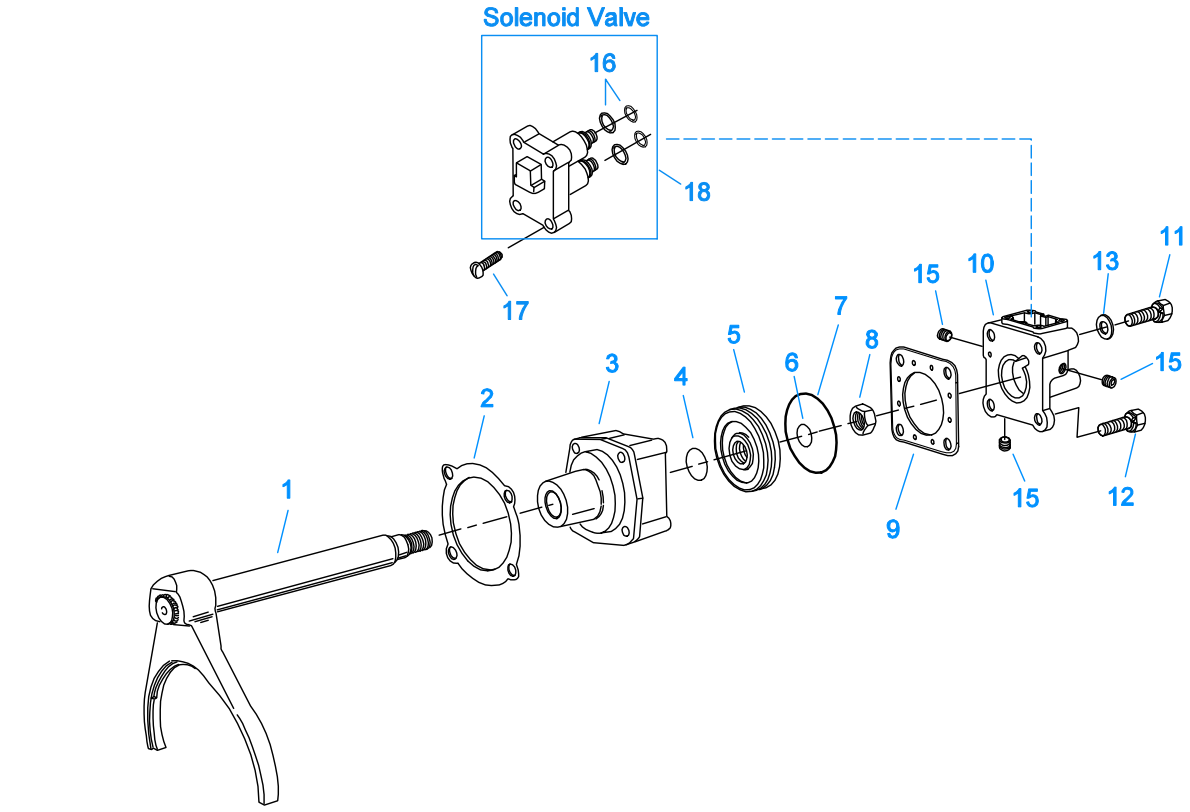

20539-03-01

RANGE CYLINDER

Item	Current Part	Description	Replaced Part	Qty.	Notes	Kits/Assys Where Needed
1	A-5474	SHIFT YOKE ASSY		1		
2	14347	GASKET		1		K-3484,K-3518
3	691348	RANGE CYLINDER		1		
4	14765	-O- RING		1		K-3484
5	14341	PISTON	23353	1		
6	14345	-O- RING		1		K-3484
7	14344	-O- RING		1		K-3484
8	X-1-1010	NUT		1	5/8"-18	
9	691955	GASKET	691440	1		K-3365,K-3484,K-3518
10	K-3365	RANGE CYL COVER KIT	691442	1		
11	X-8-647	CAPSCREW		2	3/8"-16X4-3/4"	
12	X-8L-605	CAPSCREW		2	3/8"-16X3"	
13	X-3-600	LOCKWASHER		2	3/8"	
15	X-12-208	PIPE PLUG		3	1/8" NPT	
16	K-2908	-O- RING KIT		1	FOR SOLENOID VALVE	
17	X-8-264	HEX FLANGE HEAD SCREW	X 8 259	4	#10-24 X 1 1/4	
18	K-3682	RANGE/SPLITTER VALVE KIT	5561801 ,5561804 ,K - 2907	1		

Group: REVERSE IDLER

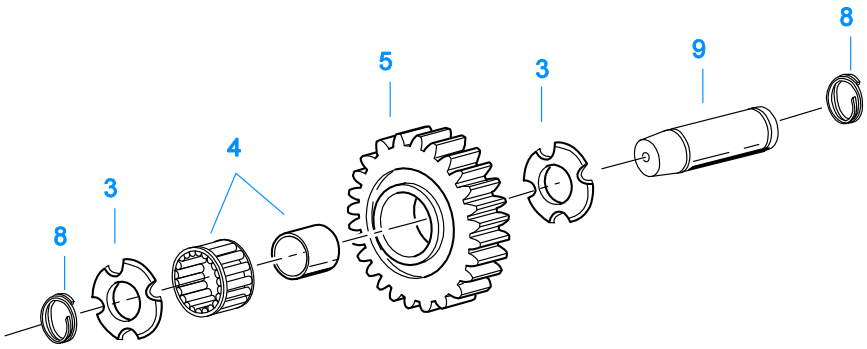

11382A-10-04

REVERSE IDLER

Item	Current Part	Description	Replaced Part	Qty.	Notes	Kits/Assys Where Needed
3	4302982	WASHER	14282	4		
4	14287	BEARING	4305020	2		K-3519,K-3522
5	16757	REVERSE IDLER GEAR	22409	2		
8	4303336	RETAINING RING		4		
9	4305513	IDLER SHAFT		2		

Group: SHIFT BAR HOUSING

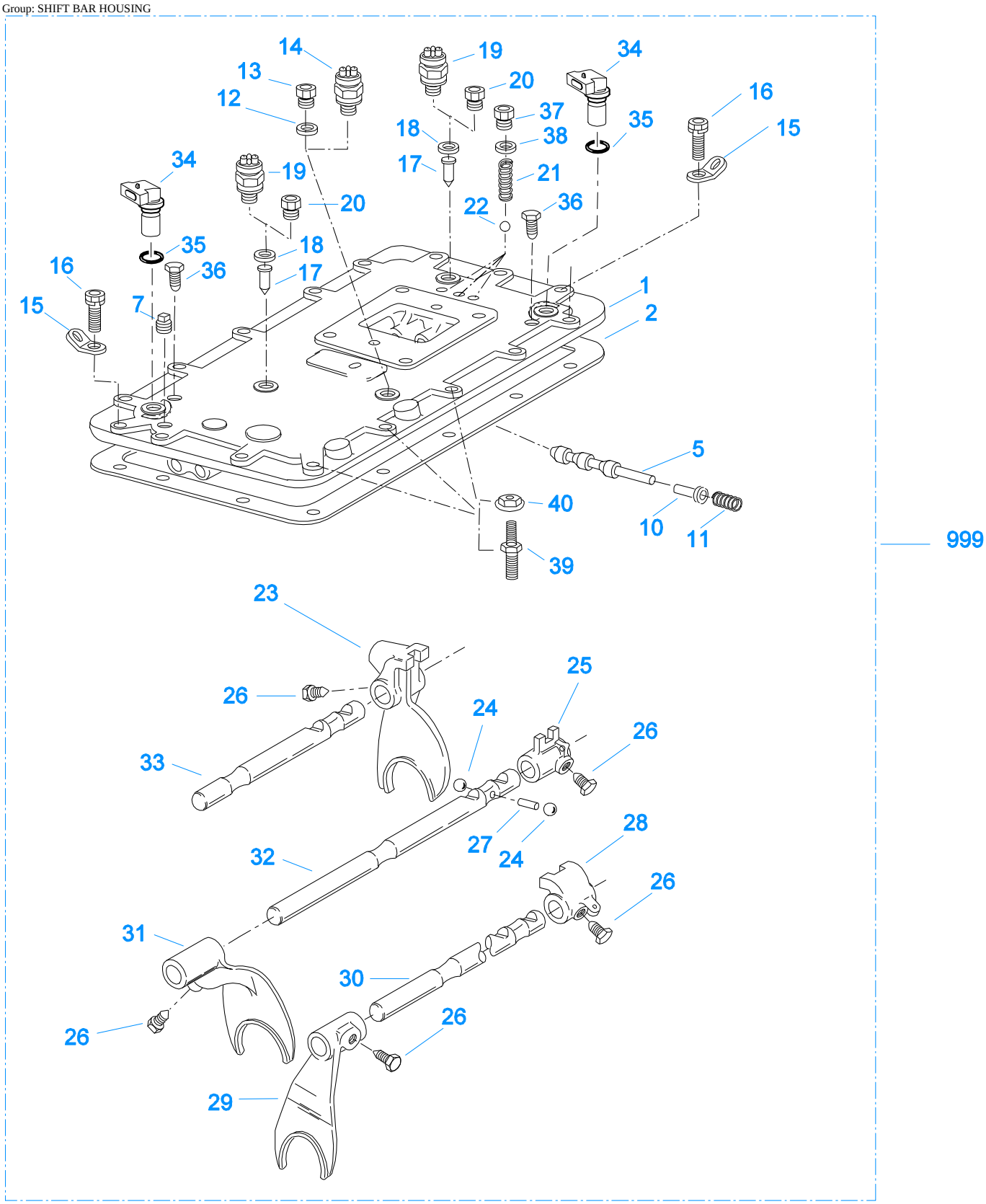

20237-10-05

SHIFT BAR HOUSING

Item	Current Part	Description	Replaced Part	Qty.	Notes	Kits/Assys Where Needed
1	S-3022	SHIFT BAR HOUSING ASSY	4305895	1	HOUSING ONLY	
2	4302676	GASKET	14918	1		K-3518,S-3021,S-3022
5	20332	AIR VALVE SHAFT	17177	1		S-3021
7	X-12-603	PIPE PLUG	X12 602	1	3/8" NPT	
10	21966	PLUNGER		1		
11	4301372	SPRING		1		
12	17179	GASKET		1		S-3021,S-3022
13	4303655	PLUG	17178	1		S-3021,S-3022
14	22941	NEUTRAL LIGHT SWITCH	12639	1	SWITCH NORMALLY CLOSED	
15	20815	LIFTING EYE	17105	2		S-2956
16	X-8L-602	CAPSCREW		5	3/8"-16X1-1/2"- TWO FOR LIFTING EYES, 2 FOR HARNESS BRACKET AND 1 FOR STRAIN RELIEF VALVE	
16	X-8L-604	CAPSCREW		8	3/8"-16X1-1/4"	
17	15899	PIN		2		
18	15900	GASKET		2		S-3021,S-3022
19	22940	REVERSE LIGHT SWITCH	16830	1	SWITCH NORMALLY OPEN	
20	4303656	PLUG	15917	1		S-3021,S-3022
21	691661	COMPRESSION SPRING		3		S-3021
22	X-14-800	STEEL BALL		3	1/2"	
23	691712	SHIFT YOKE	4301376	1	REVERSE/1ST	S-3021
24	X-14-1200	STEEL BALL		2	3/4"	
25	14658	SHIFT BLOCK		1	2ND/3RD	S-3021
26	3220	LOCKSCREW		5		S-3021
27	1634	INTERLOCK PIN		1		S-3021
28	14659	SHIFT BLOCK		1	4TH/5TH	S-3021
29	691601	SHIFT YOKE	4302212	1	4TH/5TH	S-3021
30	4301366	YOKE BAR		1	4TH/5TH	S-3021
31	691600	SHIFT YOKE	4302994	1	2ND/3RD	S-3021
32	4301365	YOKE BAR		1	2ND/3RD	S-3021
33	4301364	YOKE BAR		1	REVERSE/1ST	S-3021
34	K-3231	SPEED SENSOR KIT	A - 6398 ,A - 6724	2	SINGLE PICK-UP (2 PIN)	
35	14142	-O- RING		2		K-3638,S-3021
36	X-8C-409	CAPSCREW		2	1/4"-20X5/8"	
37	4303656	PLUG	15917	3		S-3021,S-3022
38	15900	GASKET		3		S-3021,S-3022
39	4305869	SCREW 3/8 & 5/16		3	USED FOR MOUNTING ECU	
40	4305870	NUT ASSEMBLY		3	5/16-18, USED FOR MOUNTING ECU	K-3734
999	S-3021	SHIFT BAR HOUSING ASSY	4305895	1	COMPLETE	

Group: SHIFT CONTROLS

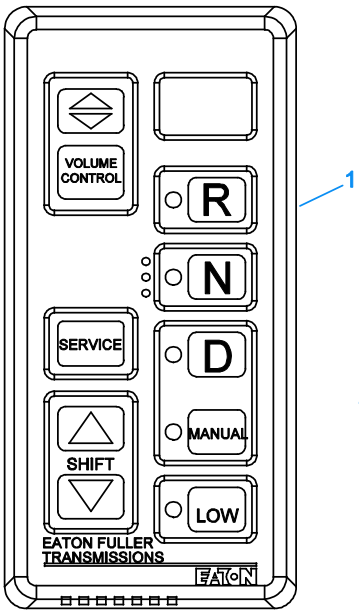

PUSHBUTTONASSEMBLY

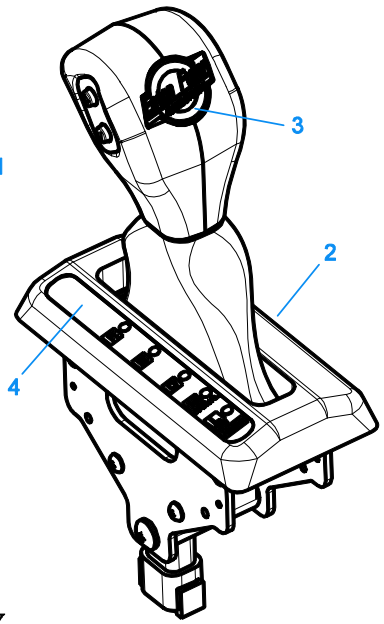

COBRA LEVER - only for use with 10MY559M Mack Swing Arm Bracket

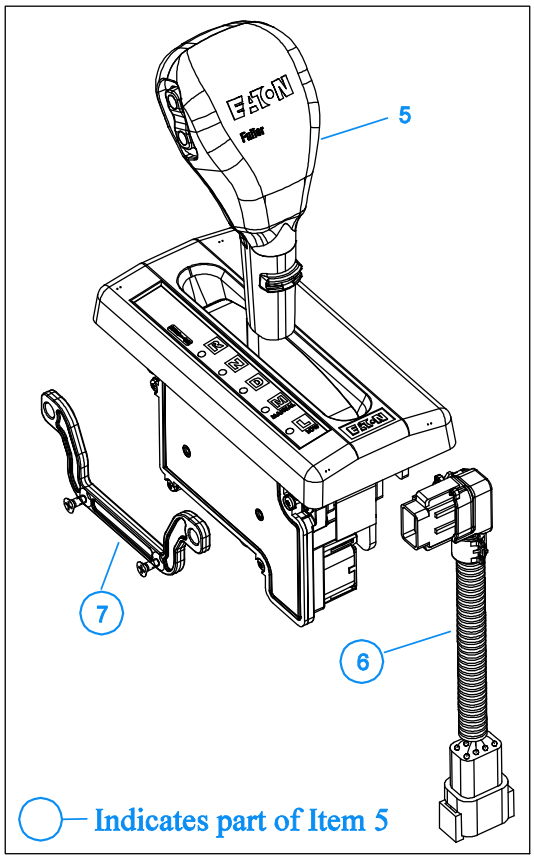

COBRA LEVER - Latest Design - for all applications with the exception of units using the 10MY559M Mack Swing Arm Bracket (see illustration to the left)

10209-06-09

SHIFT CONTROLS

Item	Current Part	Description	Replaced Part	Qty.	Notes	Kits/Assys Where Needed
1	4306043	PUSHBUTTON ASSY	A - 7466,S-3007	1		
2	K-3997	COBRA SHIFT LEVER KIT (RHO) W/MACK SWING ARM	4305447,K-3680	1	(LEFT HAND DRIVE), ALSO KNOWN AS (RHO) RIGHT HAND OPERATION - FOR UNITS USING THE MACK 10MY559M SWING ARM BRACKET	
3	5505111	SHIFT LEVER KNOB DECAL		1		
4	5505110	SHIFT LEVER POSITION STRIP		1		
5	K-3980	COBRA SHIFT LEVER KIT (RHO)	K-3680	1	(LEFT HAND DRIVE), ALSO KNOWN AS (RHO) RIGHT HAND OPERATION	
6	A-7982	JUMPER HARNESS ASSY		1		
7	K-3979	SPACER KIT		1	INCLUDES (4) SPACER MOUNTING SCREWS	

Group: X-Y SHIFTER MODULE

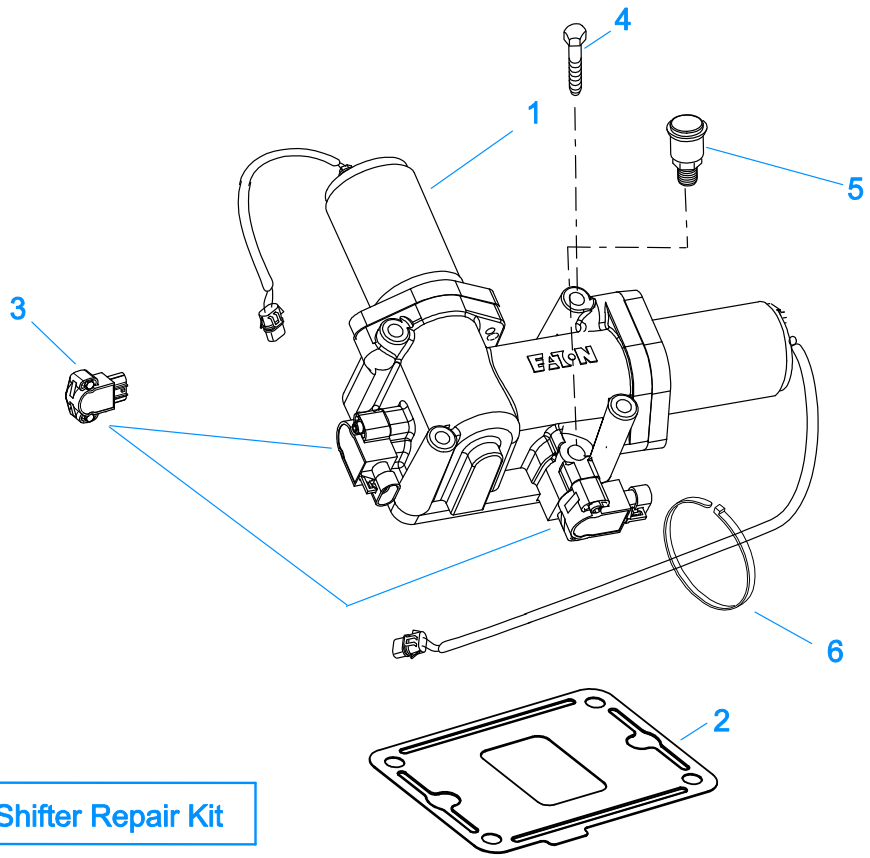

7	XY Shifter Repair Kit

20230-09-01

X-Y SHIFTER MODULE

Item	Current Part	Description	Replaced Part	Qty.	Notes	Kits/Assys Where Needed
1	K-3784RX	REMAN EXCH GEN 3 X-Y SHIFTER KIT	A - 7670,K-3665,K-3784	1		
2	4305452	GASKET	4301958	1		K-4009
3	K-3438	POSITION SENSOR KIT	691551 ,691926	2		
4	X-8C-615	CAPSCREW		4		
5	4304602	BREATHER	23605	1	1/4" NPT	
6	5559348	TY-RAP		12	FOR X-Y SHIFTER AND TRANS HARNESSES	K-3681,K-3682,K-3739
7	K-4009	XY SHIFTER REPAIR KIT		1		