Roadranger®

More time on the road®

Illustrated Parts List

RTO-16910B-DM2
July 2011

For parts or service call us
Pro Gear & Transmission, Inc.

1 (877) 776-4600

(407) 872-1901

parts@eprogear.com

906 W. Gore St.

Orlando, FL 32805

Contents

How To Use The Illustrated Parts List 3
AUXILIARY DRIVE GEAR 4
CASE (AUX) 5
CASE (FRONT) 7
CASE (FRONT) FORCED LUBE 9
CONTROLLER ECU & HARNESS 12
COUNTERSHAFT & BRGS (AUX) 13
COUNTERSHAFT ASSY 14
FILTER REGULATOR 15
GEAR DISPLAY MODULE 16
INERTIA BRAKE 18
INPUT SHAFT & DRIVE GEAR 19
INTEGRAL OIL PUMP 20
KITS & ASSEMBLIES 22
MAINSHAFT & SYNCHRO(AUX) 24
MAINSHAFT ASSY 25
MISCELLANEOUS 26
OIL COOLER 27
OIL FILTER 28
RANGE CYLINDER 29
REVERSE IDLER 30
SHIFT BAR HOUSING 31
SHIFT CONTROLS 33
X-Y SHIFTER MODULE 34

How To Use The Illustrated Parts List

The information contained in this document is subject to frequent updates. Therefore, for the latest information available, please visit the interactive Electronic Parts Catalog at www.roadranger.com/epc.

Model Designation or Nomenclature

- For information regarding Model Designation and Nomenclature, visit www.roadranger.com.

Kits and Assemblies (K/A's)

- Kits and Assemblies contain groups of individual or assembled parts developed for optimal replacement or repair of a service problem.
- Kits and Assemblies are shown with applicable parts groupings in the parts listings.

Identifying Kits and Assemblies

A- Part numbers beginning with the letter 'A' are pre-assembled Production Assemblies
K- Part numbers beginning with the letter 'K' are kits that are not assembled
S- Part numbers beginning with the letter 'S' are pre-assembled Service Assemblies

- Note: Some Production Assemblies do not begin with a letter prefix (Midrange only).

Illustrations

- Illustrations show parts in assembly groups.
- Item numbers on illustrations correspond with parts listings on pages adjacent to the illustration.
- Notes are included on illustrations where additional information is needed.

Parts Listing

Parts listings are defined by parts groupings and are broken down by service assemblies. Parts listings identify a part for servicing with the following categories

- **Item Number** - corresponding with numbers on illlustrations for part identification.
- **Current Part** - indentifies part as it is available for service.
- **Description** - specifies part name or description.
- **Replaced Part** - quantity quantity required for assembly.
- **Quantity** - defines unique characteristics or requirements.
- **Notes** - indicates Kits or Assemblies that contain a particular part.
- **Kits/Assy's Where Used**

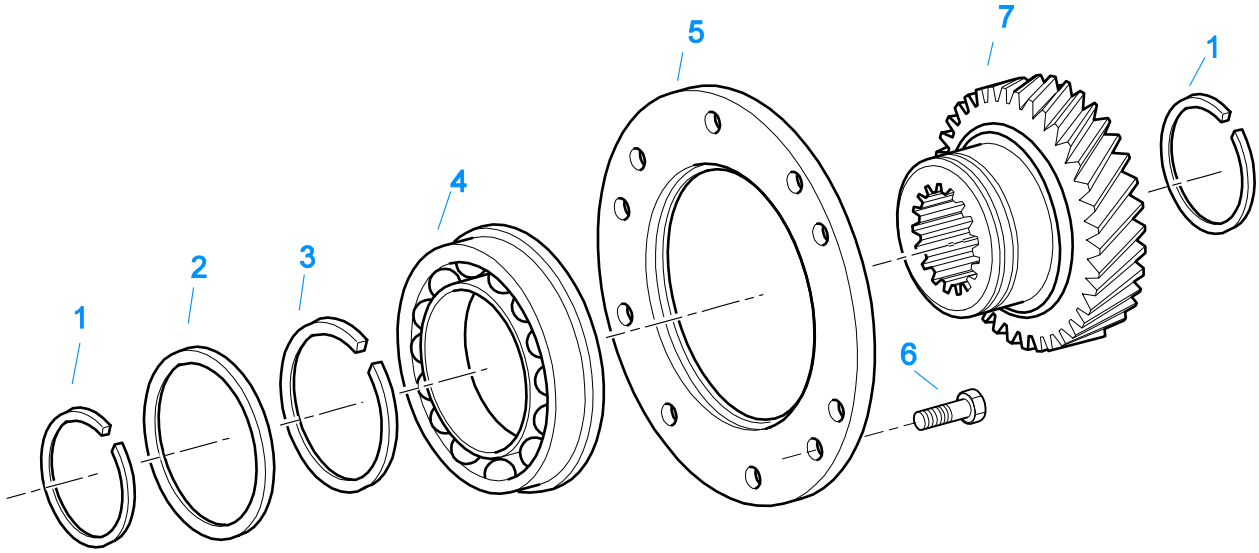

10480-12/92 Aux DG

AUXILIARY DRIVE GEAR

Item	Current Part	Description	Replaced Part	Qty.	Notes	Kits/Assys Where Needed
1	16763	SNAP RING		2		K-3519,K-3522
2	21320	SNAP RING RETAINER		1		K-3519,K-3522
3	16628	SNAP RING		1		
4	5566507-BOX	BEARING	5566504,5566507	1		K-3519,K-3522
5	16138	BEARING RETAINER		1		
6	X-8-645	CAPSCREW	X 8 612	6	3/8"-16X1"	
7	23159	AUXILIARY DRIVE GEAR	21321	1		

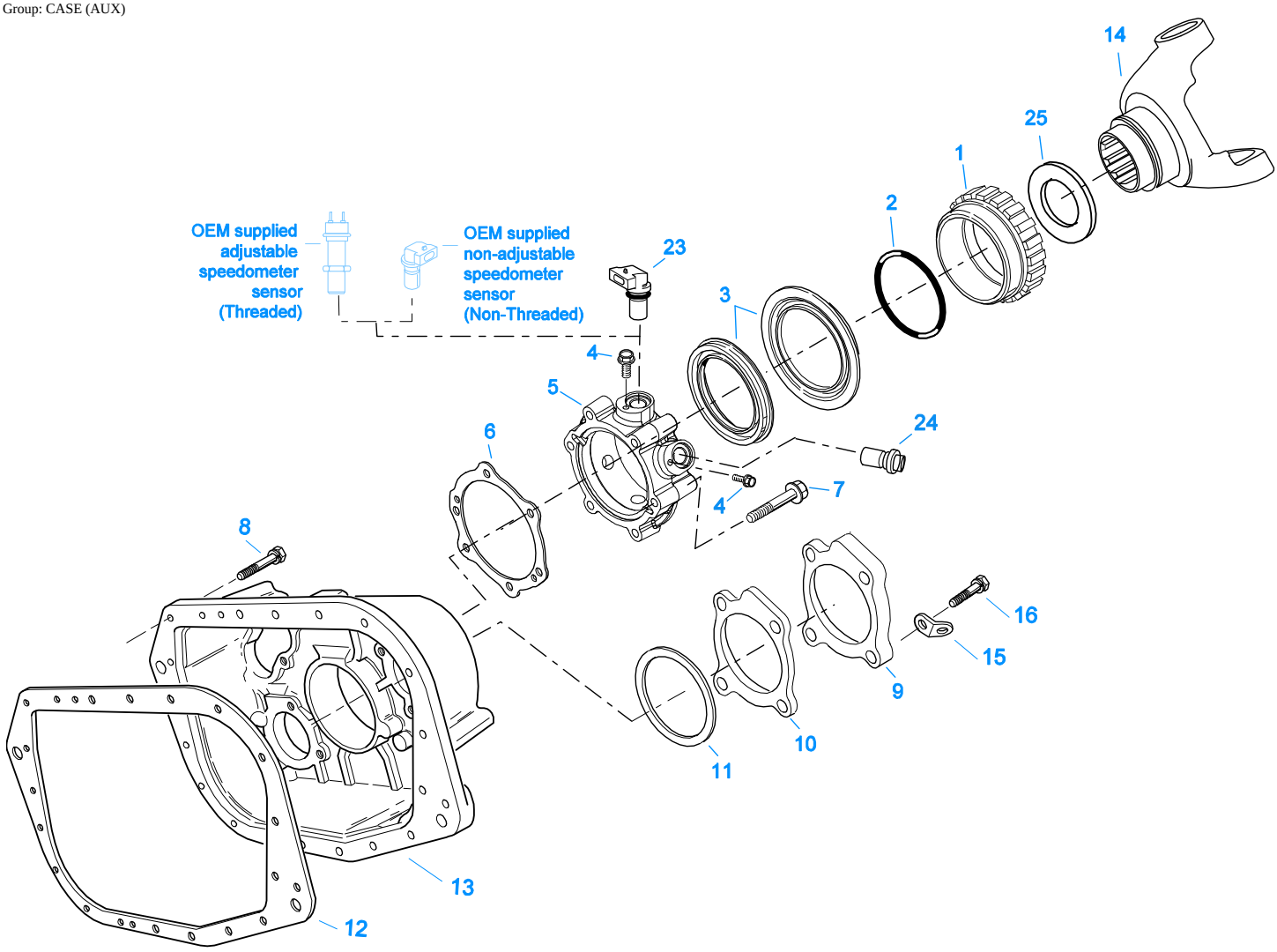

11406B-03-03

CASE (AUX)

Item	Current Part	Description	Replaced Part	Qty.	Notes	Kits/Assys Where Needed
1	S-2501	SPEEDO ROTOR ASSY	4302242	1	MAGNETIC	
2	5568511	-O- RING		1		K-2918,S-2501,S-2913,S-2956
3	K-2918	OIL SEAL KIT	4302322 4302323	1	"FOR MAGNETIC COVER"	K-3519,K-3522
4	X-8-0801M	CAPSCREW		3	M8 X 1.25 X 12MM	

Item	Current Part	Description	Replaced Part	Qty.	Notes	Kits/Assys Where Needed
5	S-2913	REAR BEARING COVER ASSY	691637 ,4304651 ,4305833	1		
6	1009551	GASKET - RED EDGE MOLDED		1	RED EDGE MOLDED GASKET - UNCOMPRESSED THICKNESS .043 - .051 - NOT INTERCHANGEABLE WITH ANY OTHER GASKET	K-2918,K-3518,S-2913
6	4302247	GASKET - PURPLE EDGE MOLDED		1	NON EDGE MOLDED GASKET - UNCOMPRESSED THICKNESS - .013 - .018 - NOT INTERCHANGABLE WITH ANY OTHER GASKET	K-2918,K-3518
7	X-8L-611	CAPSCREW		4	3/8"-16X3-1/4"	
7	X-8L-614	CAPSCREW		2	3/8"-16X2"	
8	X-8L-602	CAPSCREW		16	3/8"-16X1-1/2"	
8	X-8L-614	CAPSCREW		2	3/8"-16X2"	
8	X-8L-616	CAPSCREW	X 8 616	1	3/8"-16X2-3/4"	
9	4302320	COVER	21346	2		S-2956
10	4305978	GASKET	4302246	2		K-3518,S-2956
11	K-2805	SHIM KIT	21452 K - 2106	1		K-3519,K-3522,S-2956
12	14335	GASKET		1		K-3518,S-2956
13	4305046	REAR HOUSING		1		
14	5505543	YOKE-1710 HALF ROUND		1		
15	20815	LIFTING EYE	17105	2		S-2956
16	X-8L-600	CAPSCREW		8	3/8"-16X1"	
23	K-3231	SPEED SENSOR KIT	A - 6398 ,A - 6724	1	SINGLE PICK-UP (2 PIN)	
24	K-3523	SPEEDO PLUG KIT	4302707	2		
25	4304653	SHIELD		1		S-2913

Group: CASE (FRONT)

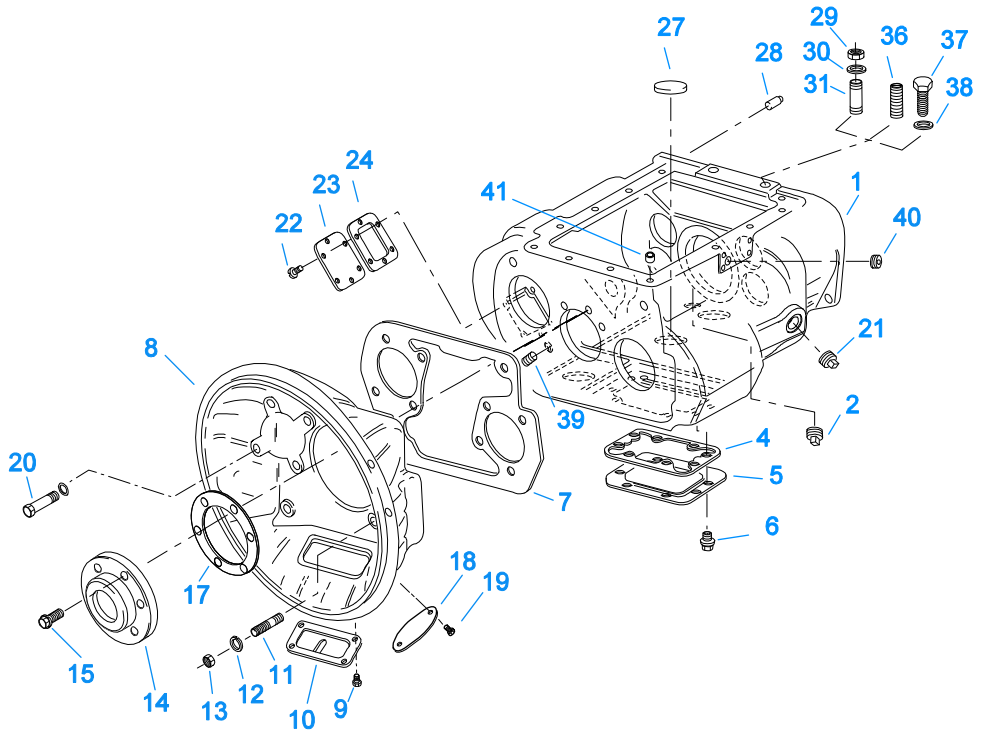

10305C-03-03

CASE (FRONT)

Item	Current Part	Description	Replaced Part	Qty.	Notes	Kits/Assys Where Needed
1	S-2998	CASE ASSY	4302218 ,4305765 ,S - 2075	1	FOR USE W/INTEGRAL PUMP	
2	X-12-1207	PIPE PLUG	X12 1202 ,X12 1206	1	3/4" MAGNETIC	
4	4305310	GASKET	4302810	1		K-3518,K-3637,K-3644
5	4302809	PTO COVER	16596 ,4300571	1		
6	X-8-725	CAPSCREW	X 8 724	8	7/16"-14X7/8"	
7	4306584	CLUTCH HOUSING GASKET	4304815,4305668	1		K-3518,K-3760
8	4305059	CLUTCH HOUSING		1		
9	X-8-1200M	CAPSCREW		4	M12 X 1.75 X 20MM	
10	K-3643	CLUTCH HOUSING COVER KIT	691954	1		
11	4306583	STUD	5966	6		
12	X-10-1005	WASHER	X 3 1000 ,X10 1000 ,X10 1004	6	1.23 X 6.60	
13	X-1-1012	HEX NUT	X-1-1005	6	.625-18	
14	20550	FRONT BRG COVER		1	2" PULL	
15	X-8L-604	CAPSCREW		6	3/8"-16X1-1/4"	
17	14311	GASKET		1		K-3518
18	4303692	HAND HOLE COVER		1		K-3760
19	X-8-423	CAPSCREW		2	1/4"-20X1/2"	K-3760
20	X-8C-830	HEX HEAD SCREW/WASHER ASSY	X-8C-826	4	.500-13 X 1.490, FOR ALUMINUM HOUSING	K-3760
21	4304023	PLUG	4303747	1	1-1/16" MAGNETIC, O-RING INCLUDED	S-2995,S-2998
22	X-8-686	CAPSCREW		6	3/8"-16X3/4"	
23	14575	PTO COVER	4302254	1		
24	4305309	GASKET	1684	1		K-3518,K-3637,K-3644,K-3683
27	14373	MAGNET		3		S-2995,S-2998
28	18128	PIN		2		
29	X-1-1012	HEX NUT		2	.625-18	
30	X-10-1005	WASHER	X 3 1000 ,X10 1000 ,X10 1004	2	1.23 X 6.60	
31	14554	STUD	1632 ,6579	2	5/8" X 2-3/16"	
36	23104	PLUG	1712	2		
37	X-8-1005	CAPSCREW		2	5/8"-11X1-1/4"	

Item	Current Part	Description	Replaced Part	Qty.	Notes	Kits/Assys Where Needed
38	20814	SPACER		2		
39	X-12-802	PIPE PLUG	X12 800	1	1/2"	
40	X-12-1207	PIPE PLUG	X12 1202 ,X12 1206	1	3/4" MAGNETIC	
41	691447	PIN		1		S-2995,S-2998

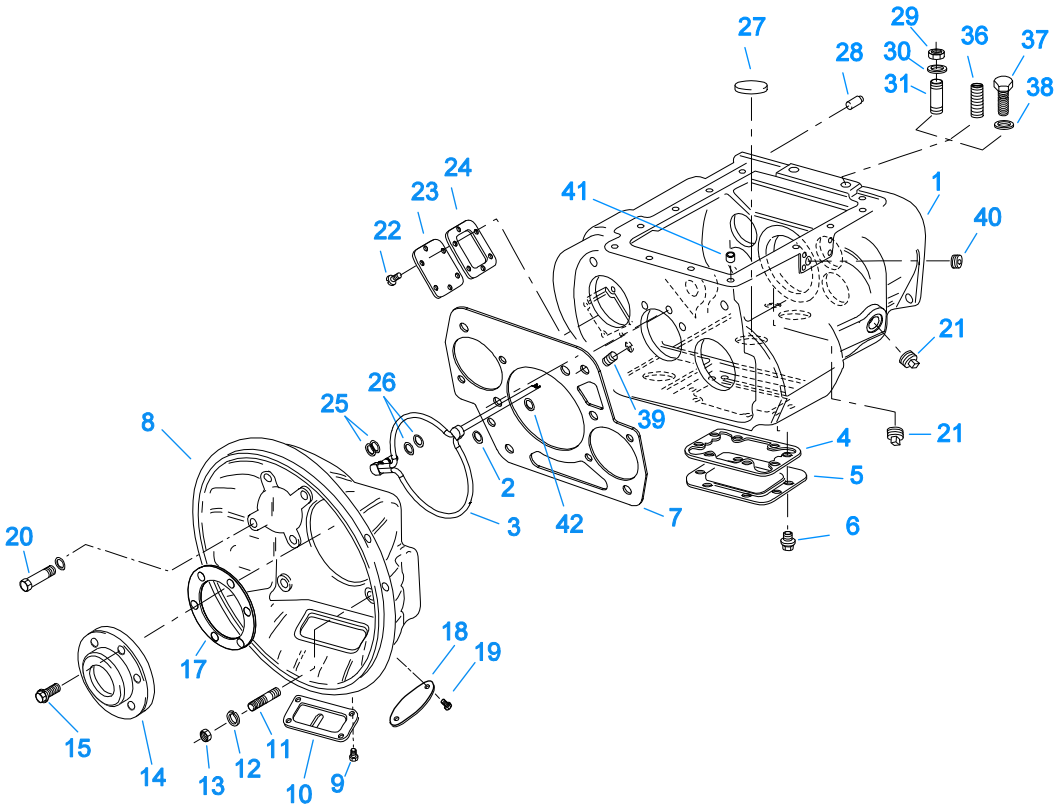

10305E-08-04

CASE (FRONT) FORCED LUBE

Item	Current Part	Description	Replaced Part	Qty.	Notes	Kits/Assys Where Needed
1	S-2995	CASE ASSY	4305765	1		
2	5568544	-O- RING		1		
3	A-7471	EXTENDED LUBE TUBE ASSY	4305393	1		
4	4305310	GASKET	4302810	1		K-3518,K-3637,K-3644
5	4302809	PTO COVER	16596 ,4300571	1		
6	X-8-725	CAPSCREW	X 8 724	8	7/16"-14X7/8"	
7	4306584	CLUTCH HOUSING GASKET	4304815,4305668	1		K-3518,K-3760
8	K-3760	FORCED LUBE CL HSG KIT	4304328, 4305819, 4305751	1	#1 PULL ALUMINUM	
9	X-8-1200M	CAPSCREW		4	M12 X 1.75 X 20MM	
10	K-3643	CLUTCH HOUSING COVER KIT	691954	1		
11	4306583	STUD	5966	6		
12	X-10-1005	WASHER	X 3 1000 ,X10 1000 ,X10 1004	6	1.23 X 6.60	
13	X-1-1012	HEX NUT	X-1-1005	6	.625-18	
14	20550	FRONT BRG COVER		1	2" PULL	
15	X-8L-604	CAPSCREW		6	3/8"-16X1-1/4"	
17	14311	GASKET		1		K-3518
18	4303692	HAND HOLE COVER		1	SEE PART MARKING ON COMPONENT PRIOR TO ORDERING TO ENSURE THAT THE PROPER SIZE HAND HOLE CAVER IS ORDERED	K-3760
18	4305365	HAND HOLE COVER		1	SEE PART MARKING ON COMPONENT PRIOR TO ORDERING TO ENSURE THAT THE PROPER SIZE HAND HOLE CAVER IS ORDERED	

Item	Current Part	Description	Replaced Part	Qty.	Notes	Kits/Assys Where Needed
19	X-8-423	CAPSCREW		2	1/4"-20X1/2"	K-3760
20	X-8C-830	HEX HEAD SCREW/WASHER ASSY	X-8C-826	6	.500-13 X 1.490	K-3760
21	4304023	PLUG	4303747	2	1-1/16" MAGNETIC, O-RING INCLUDED	S-2995,S-2998
22	X-8-686	CAPSCREW		6	3/8"-16X3/4"	
23	14575	PTO COVER	4302254	1		
24	4305309	GASKET	1684	1		K-3518,K-3637,K-3644,K-3683
25	13835	-O- RING		2		
26	13653	-O- RING		2		K-2908
27	14373	MAGNET		3		S-2995,S-2998
28	18128	PIN		2		
29	X-1-1012	HEX NUT		2	.625-18	
30	X-10-1005	WASHER	X 3 1000 ,X10 1000 ,X10 1004	2	1.23 X 6.60	
31	14554	STUD	1632 ,6579	2	5/8" X 2-3/16"	
36	23104	PLUG	1712	2		
37	X-8-1005	CAPSCREW		2	5/8"-11X1-1/4"	
38	20814	SPACER		2		
39	X-12-802	PIPE PLUG	X12 800	1	1/2"	
40	X-12-1207	PIPE PLUG	X12 1202 ,X12 1206	1	3/4" MAGNETIC	
41	691447	PIN		1		S-2995,S-2998
42	13834	-O- RING		1		

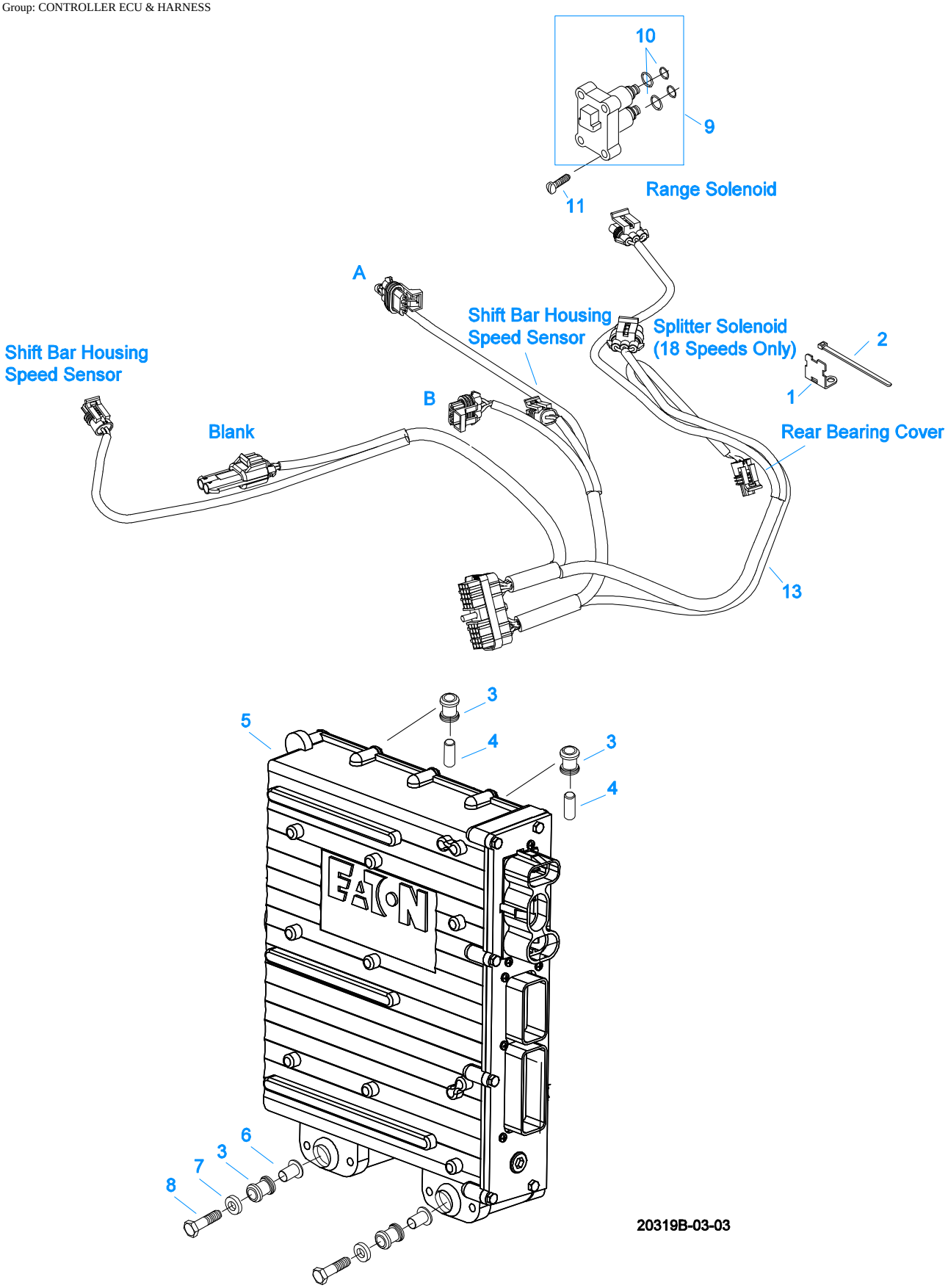
10
9
11
Range Solenoid
A
Shift Bar Housing
Speed Sensor
Splitter Solenoid
(18 Speeds Only)
2
1
Shift Bar Housing
Speed Sensor
B
Blank
Rear Bearing Cover
13
3
5
4
3
4
6
3
7
8
20319B-03-03

CONTROLLER ECU & HARNESS

Item	Current Part	Description	Replaced Part	Qty.	Notes	Kits/Assys Where Needed
1	4301302	BRACKET		3		
2	5559348	TY-RAP		8		K-3682,K-4118
3	4301367	MOUNTING PAD		4		
4	4301378	DOWEL PIN		2		S-2905,S-2927
5	K-3639RX	REMAN EXCHANGE TRANSMISSION CONTROLLER KIT	K-3639, K-3639R	1		
6	4301369	SLEEVE		2		
7	4302114	WASHER		2		
8	X-8-552	SCREW		2	5/16"-18X1-1/2"	
9	K-3682	RANGE/SPLITTER VALVE KIT	5561801 ,5561804 ,K - 2907	1		
10	K-2908	-O- RING KIT		1	FOR SOLENOID VALVE	
11	X-8-264	HEX FLANGE HEAD SCREW	X 8 259	4	#10-24 X 1 1/4	
13	K-4118	TRANSMISSION HARNESS KIT	691664,K-3527	1		

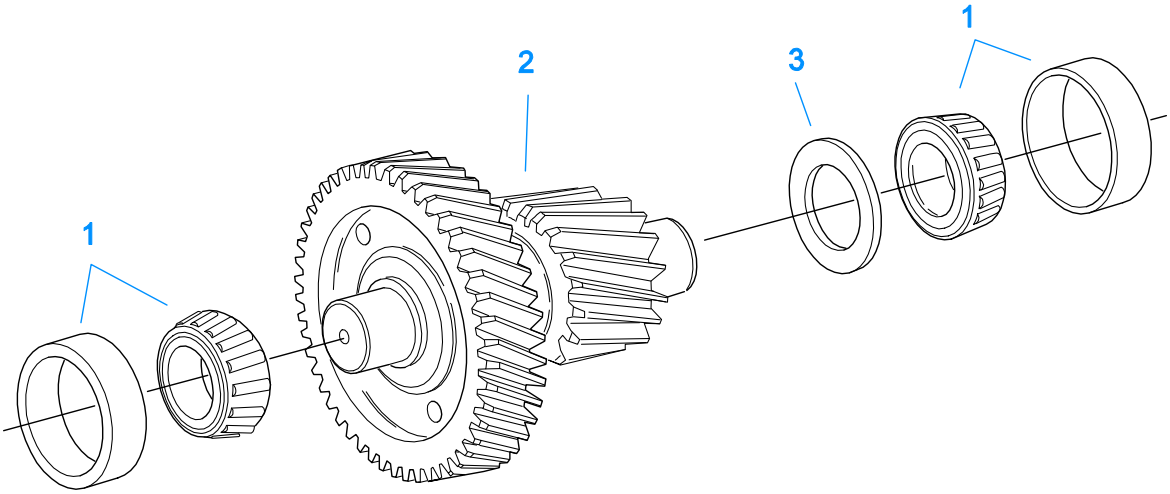

10440-1/92 Aux CS Helical

COUNTERSHAFT & BRGS (AUX)

Item	Current Part	Description	Replaced Part	Qty.	Notes	Kits/Assys Where Needed
1	4302074-BOX	BEARING	21343,4302074	4		K-3519,K-3522
2	A-6338	WELDED COUNTERSHAFT ASSY	A - 5626	2	C/S 4302093 - D/G 23160	
3	21342	SPACER		2		

Group: COUNTERSHAFT ASSY

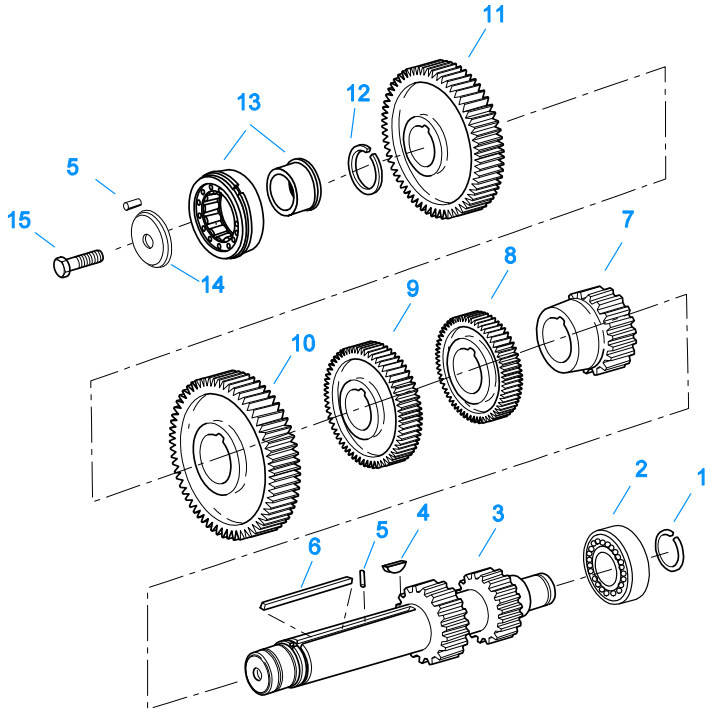

10341-1/92 CS/RT

COUNTERSHAFT ASSY

Item	Current Part	Description	Replaced Part	Qty.	Notes	Kits/Assys Where Needed
1	14317	SNAP RING		2		K-3519,K-3522
2	14366	BEARING		2		K-3519,K-3522
3	4303621	CNTRSHFT-W/REV & 1ST	4303619	2		
4	X-6-E	KEY		2		
5	62511	ROLL PIN		4		
6	4304840	KEY	19673	2		
7	4306076	2ND GEAR-CNTRSHFT	19247,20471	2		
8	20482	3RD GEAR-CNTRSHFT	19615	2		
9	4305052	OD GEAR-CNTRSHFT	4302089	2		
10	15953	PTO GEAR - LOWER		1		
10	20840	PTO GEAR - UPPER	15952	1		
11	4305657	DRIVE GEAR-CNTRSHFT	19240 ,19243 ,20392 ,4302087,21020	2		
12	19198	SNAP RING		2		
13	4304599	BEARING	4302677 4304598	2		K-3519,K-3522
14	4304605	RETAINER	19548	2	ROLL PIN NO LONGER REQUIRED	
15	X-7-1005	CAPSCREW		2	5/8"-18X1-3/4"	

Group: FILTER REGULATOR

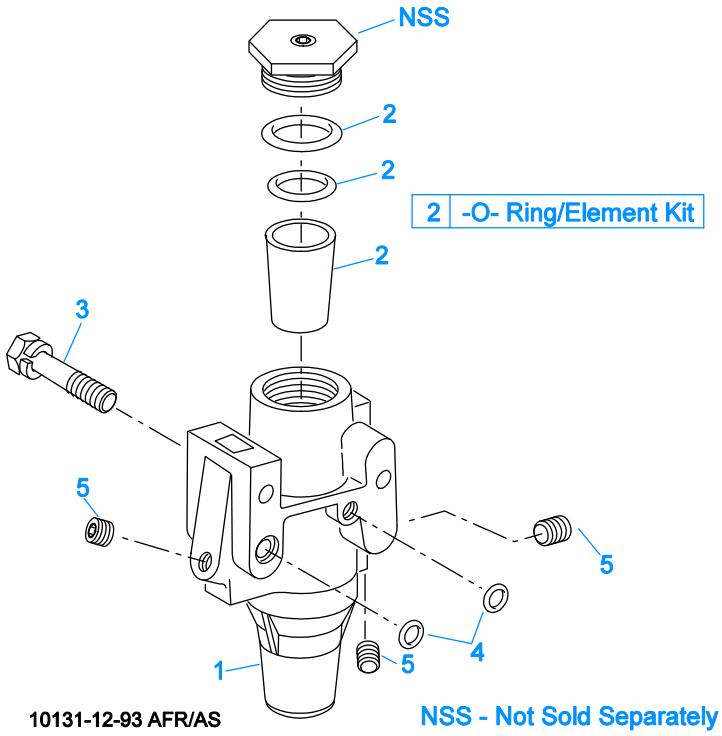

FILTER REGULATOR

Item	Current Part	Description	Replaced Part	Qty.	Notes	Kits/Assys Where Needed
1	K-2170	FILTER REG KIT	A - 5454	1		
2	K-1698	-O- RING/ELEMENT KIT		1	FOR FILTER REGULATOR	
3	X-8C-412	CAPSCREW	X 8S 412	2	1/4"-20X2-1/4"	
4	15114	-O- RING		2		K-2170,K-3365,K-3484
5	X-12-208	PIPE PLUG		3	1/8" NPT	

Group: GEAR DISPLAY MODULE

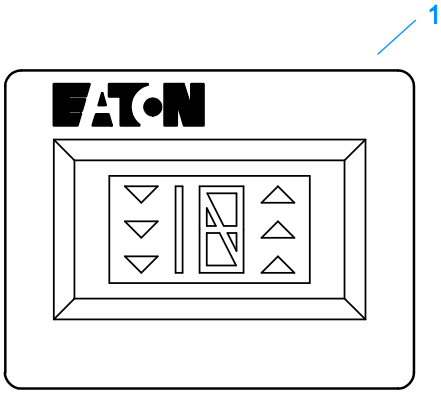

30317-03-01

GEAR DISPLAY MODULE

Item	Current Part	Description	Replaced Part	Qty.	Notes	Kits/Assys Where Needed
1	K-3199	DRIVER DISPLAY MODULE	4302640	1		

Group: INERTIA BRAKE

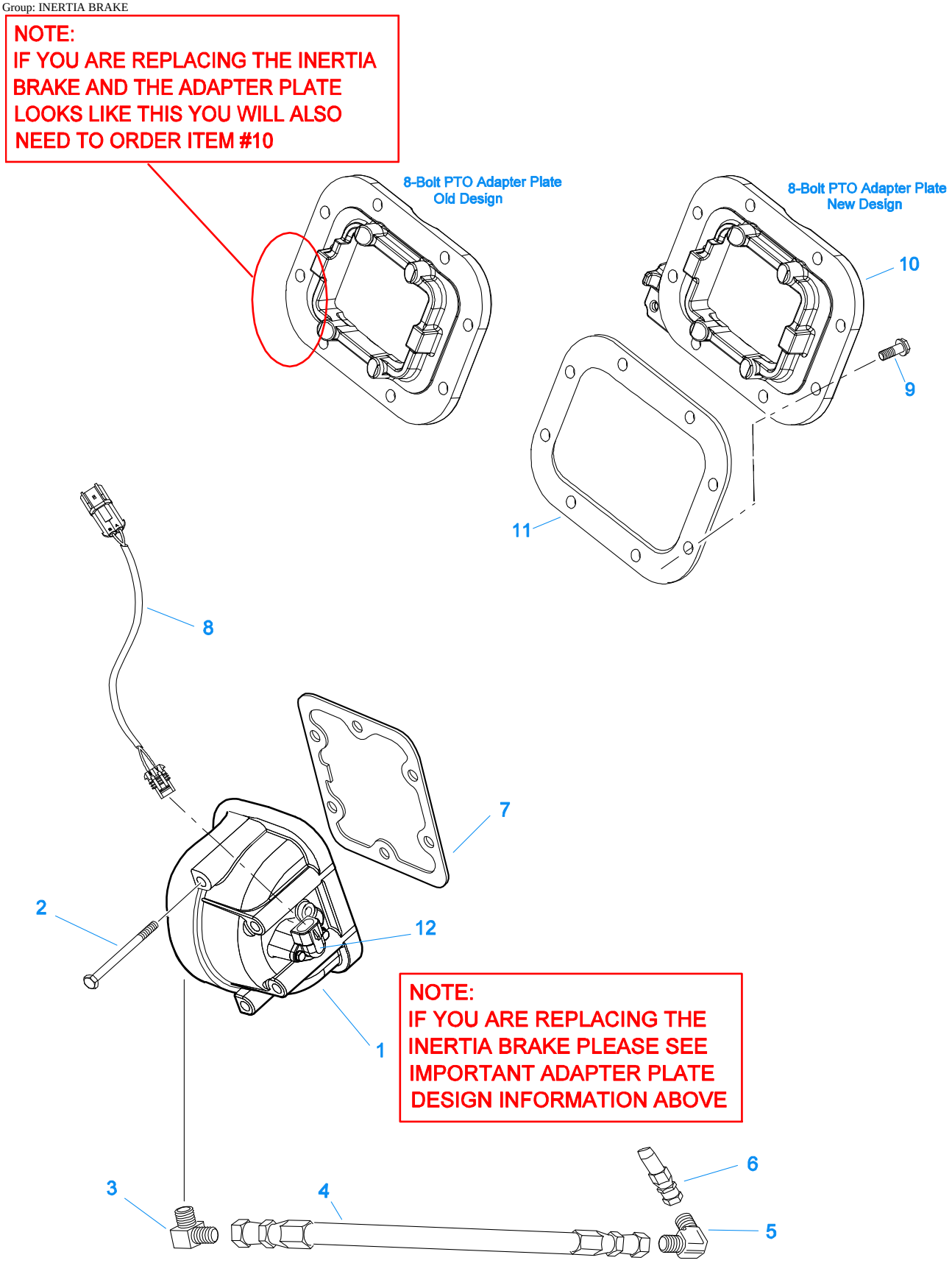

20427-03-03

INERTIA BRAKE

Item	Current Part	Description	Replaced Part	Qty.	Notes	Kits/Assys Where Needed
1	K-3637	INERTIA BRAKE KIT	A - 7452	1	PLEASE SEE IMPORTANT SERVICE INFORMATION INDICATED ON ILLUSTRATION.	
2	X-8-6116	HEX FLANGE HEAD SCREW		6	3/8"-16X4.25	
3	691603	CONN 3/8 PIPE TO3/4 16		1		
4	5588208	OIL HOSE ASSEMBLY		1	FOR USE WITH 4302218 CASE	
4	5588210	OIL HOSE ASSEMBLY		1	FOR USE WITH 4305765 CASE	
5	691651	ELBOW, 90 DEG MALE		1		
6	4305714	FILTER FITTING		1	FOR USE WITH 4305765 CASE	
6	691517	FILTER FITTING		1	FOR USE WITH 4302218 CASE	
7	4305309	GASKET	1684	1		K-3518,K-3637,K-3644,K-3683
8	K-3758	INERTIA BRAKE JUMPER HARNESS KIT	691703	1		
9	X-8C-722	CAPSCREW		8	7/16-14X1-1/4	
10	K-3644	INERTIA BRK ADPT PLT KIT	4305450 ,4305732	1		
11	4305310	GASKET	4302810	1		K-3518,K-3637,K-3644
12	K-3638	I-BRAKE CONNECTOR KIT	691499	1		

Group: INPUT SHAFT & DRIVE GEAR

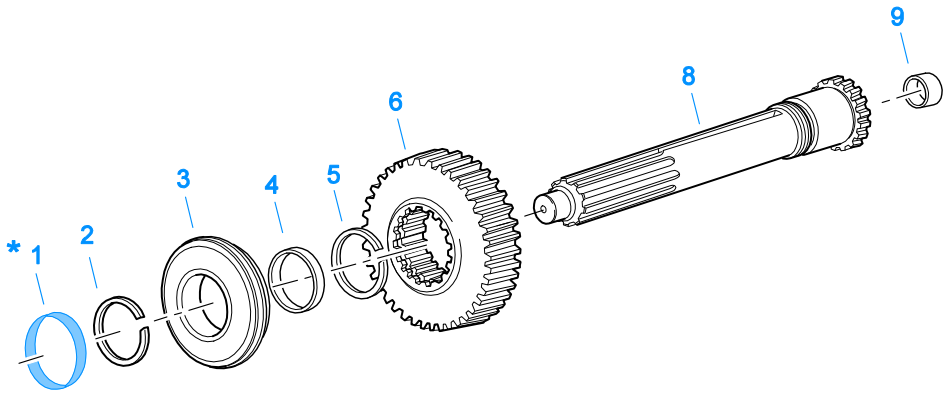

* For Shipping Only -- Do Not Replace

*

10370-1/92 IS

INPUT SHAFT & DRIVE GEAR

Item	Current Part	Description	Replaced Part	Qty.	Notes	Kits/Assys Where Needed
1	23559	SHIPPING SEAL		1	NOT SOLD FOR SERVICE	
2	16980	SNAP RING		1		K-3519
3	81504	BEARING		1		K-3519,K-3522
4	16463	SPACER		1		
5	14750	SNAP RING		1		K-3519,K-3522
6	4305659	MAIN DRIVE GEAR	22030 ,4302086,22028	1		
8	S-1659	INPUT SHAFT	20535 23566 ,4302661	1	USE W/FBC 20550	K-3519
9	16566	BUSHING		1		K-3522,S-1659

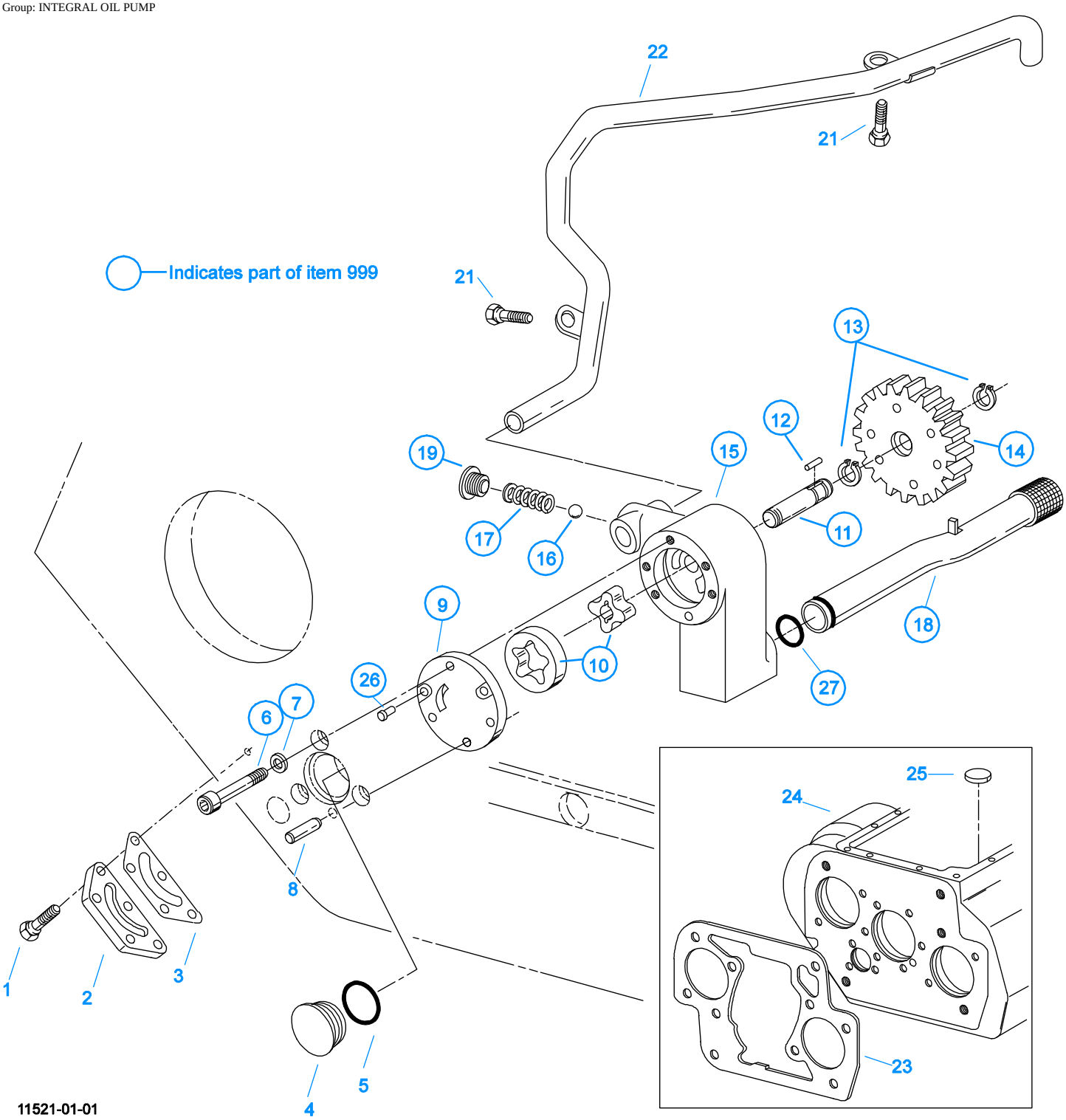

INTEGRAL OIL PUMP

Item	Current Part	Description	Replaced Part	Qty.	Notes	Kits/Assys Where Needed
1	X-8C-409	CAPSCREW		5	1/4"-20X5/8"	
2	K-2402	COVER & SCREW KIT	20513 ,4300751	1		
3	20514	GASKET		1		K-2402
4	20823	PLUG		1		
5	14765	-O- RING		1		K-3484
6	X-8-448	SCREW	X 8 445	3	1/4"-20X1-1/4"	
7	20824	WASHER		3		K-3367

Item	Current Part	Description	Replaced Part	Qty.	Notes	Kits/Assys Where Needed
8	20825	DOWEL PIN		1		
9	4303773	RETAINER		1		
10	K-3367	OIL PUMP KIT	4301829 ,4301948 ,4303776 ,4304529 ,4304572 A - 6963 ,A - 7173	1		
11	K-3367	OIL PUMP KIT	4301829 ,4301948 ,4303776 ,4304529 ,4304572 A - 6963 ,A - 7173	1		
12	20509	KEY		1		
13	14853	SNAP RING		2		
14	4303774	PUMP DRIVE GEAR	4304880	1		
15	K-3367	OIL PUMP KIT	4301829 ,4301948 ,4303776 ,4304529 ,4304572 A - 6963 ,A - 7173	1		
16	X-14-700	STEEL BALL		1	7/16"	
17	4303775	SPRING		1		
18	4305713	SUCTION TUBE	4304628	1	O-RING INCLUDED ON SUCTION TUBE	K-3367
19	4304629	PLUG		1		
21	X-8-686	CAPSCREW		2	3/8"-16X3/4"	
22	4305715	SPLITTER LUBE TUBE	A - 7197	1		
23	4306584	CLUTCH HOUSING GASKET	4304815,4305668	1		K-3518,K-3760
24	S-2995	CASE ASSY	4305765	1	FOR UNITS BUILT WITH THE FORCED LUBRICATION DESIGN	
24	S-2998	CASE ASSY	4302218 ,4305765 ,S - 2075	1	FOR UNITS BUILT PRIOR TO THE FORCED LUBRICATION DESIGN	
25	14373	MAGNET		3		S-2995,S-2998
26	X-8-447	SCREW		2		
27	20225	-O- RING		1		
999	K-3367	OIL PUMP KIT	4301829 ,4301948 ,4303776 ,4304529 ,4304572 A - 6963 ,A - 7173	1		

KITS & ASSEMBLIES

Item	Current Part	Description	Replaced Part	Qty.	Notes	Kits/Assys Where Needed
	K-1698	-O- RING/ELEMENT KIT		1	FOR FILTER REGULATOR	
	K-1956	COOLER INSTLN KIT		1		
	K-2170	FILTER REG KIT	A - 5454	1		
	K-2402	COVER & SCREW KIT	20513 ,4300751	1		
	K-2805	SHIM KIT	21452 K - 2106	1		K-3519,K-3522,S-2956
	K-2908	-O- RING KIT		1	FOR SOLENOID VALVE	
	K-2918	OIL SEAL KIT	4302322 4302323	1	"FOR MAGNETIC COVER"	K-3519,K-3522
	K-3231	SPEED SENSOR KIT	A - 6398 ,A - 6724	1	SINGLE PICK-UP (2 PIN)	
	K-3365	RANGE CYL COVER KIT	691442	1		
	K-3367	OIL PUMP KIT	4301829 ,4301948 ,4303776 ,4304529 ,4304572 A - 6963 ,A - 7173	1		
	K-3436	XY SHIFTER KIT	691381 ,A - 7034	1		
	K-3438	POSITION SENSOR KIT	691551 ,691926	1		
	K-3484	O-RING KIT - RANGE		1		K-3519,K-3522
	K-3492	SYNCHRONIZER KIT	K - 2446	1		
	K-3494	SYNCHRONIZER REPLACEMENT KIT	K - 2448	1	SLIDING CLUTCH INCLUDED IN KIT	
	K-3518	GASKET KIT		1		K-3519,K-3522
	K-3519	BASIC OVERHAUL KIT		1		
	K-3522	BASIC REBUILD KIT		1		
	K-3523	SPEEDO PLUG KIT	4302707	1		
	K-3637	INERTIA BRAKE KIT	A - 7452	1		
	K-3638	I-BRAKE CONNECTOR KIT	691499	1		
	K-3639RX	REMAN EXCHANGE TRANSMISSION CONTROLLER KIT	K-3639, K-3639R	1		
	K-3643	CLUTCH HOUSING COVER KIT	691954	1		
	K-3644	INERTIA BRK ADPT PLT KIT	4305450 ,4305732	1		
	K-3682	RANGE/SPLITTER VALVE KIT	5561801 ,5561804 ,K - 2907	1		
	K-3683	INERTIA BRAKE RELOCATION KIT		1		
	K-3758	INERTIA BRAKE JUMPER HARNESS KIT	691703	1		
	K-3760	FORCED LUBE CL HSG KIT	4304328, 4305819, 4305751	1	#1 PULL ALUMINUM	
	K-3979	SPACER KIT		1	INCLUDES (4) SPACER MOUNTING SCREWS	
	K-3980	COBRA SHIFT LEVER KIT (RHO)	K-3680	1	(LEFT HAND DRIVE), ALSO KNOWN AS (RHO) RIGHT HAND OPERATION	
	K-3997	COBRA SHIFT LEVER KIT (RHO) W/MACK SWING ARM	A - 7181,K-3680	1	(LEFT HAND DRIVE), ALSO KNOWN AS (RHO) RIGHT HAND OPERATION - FOR UNITS USING THE MACK 10MY559M SWING ARM BRACKET	
	K-4118	TRANSMISSION HARNESS KIT	691664,K-3527	1		
	S-1404	OIL FILTER	17238	1		
	S-1659	INPUT SHAFT	20535 23566 ,4302661	1	2" PULL - USE W/FBC 20550	K-3519
	S-2501	SPEEDO ROTOR ASSY	4302242	1	MAGNETIC	
	S-2688	MAINSHAFT ASSY	4303404 ,4303913	1		
	S-2905	SHIFT BAR HOUSING ASSY	691532	1	COMPLETE - FOR UNITS BUILT PRIOR TO THE FORCED LUBRICATION SYSTEM DESIGN	
	S-2913	REAR BEARING COVER ASSY	691637 ,4304651 ,4305833	1		
	S-2915	SHIFT BAR HOUSING ASSY	691532	1	HOUSING ONLY (DOES NOT INCLUDE SPEED SENSORS)	
	S-2927	SHIFT BAR HOUSING ASSY	691532	1	COMPLETE - FOR UNITS BUILT WITH THE FORCED LUBRICATION SYSTEM DESIGN	
	S-2956	RANGE SECTION ASSY		1	"B" RATIO	

Item	Current Part	Description	Replaced Part	Qty.	Notes	Kits/Assys Where Needed
	S-2989	PUSHBUTTON ASSEMBLY	S - 2985	1		
	S-2990	PUSHBUTTON ASSEMBLY		1	FOR USE WITH REMOTE LEVER	
	S-2995	CASE ASSY	4305765	1	FOR UNITS BUILT WITH THE FORCED LUBRICATION SYSTEM DESIGN	
	S-2998	CASE ASSY	4302218 ,4305765 ,S - 2075	1	FOR USE W/INTEGRAL PUMP ON UNITS BUILT PRIOR TO THE FORCED LUBRICATION SYSTEM DESIGN	

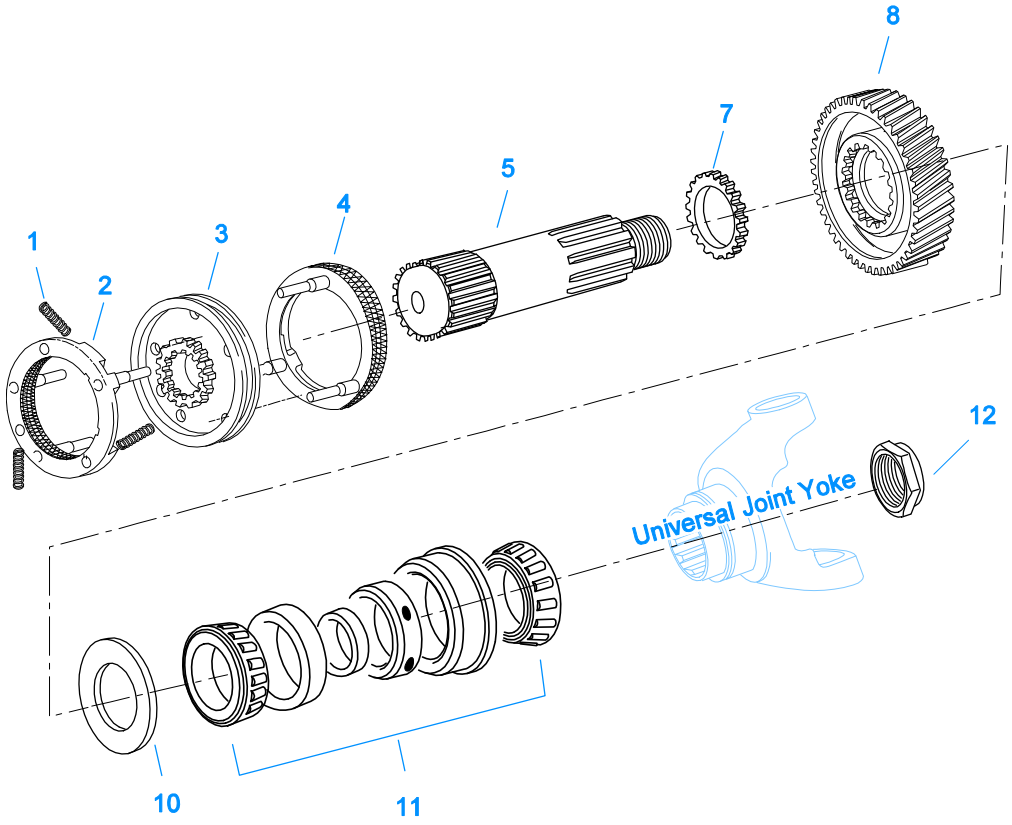

10421A-10-01

MAINSHAFT & SYNCHRO(AUX)

Item	Current Part	Description	Replaced Part	Qty.	Notes	Kits/Assys Where Needed
1	14897	SPRING		3		K-3492,K-3494,K-3519,K-3522
2	A-7331	SYNCHRONIZER ASSY	4304396 4304397 A - 5917	1	HI RANGE	K-3492,K-3494
3	20323	SLIDING CLUTCH		1		K-3494
4	A-7254	SYNCHRONIZER ASSEMBLY	A - 4937 A - 5876	1	LO RANGE	K-3492,K-3494
5	4302276	AUXILIARY MAINSHAFT		1		
7	22899	WASHER		1		
8	4302092	REDUCTION GEAR	23661	1		
10	22898	SPACER		1		
11	5556503-BOX	BEARING	5556503	1		K-3519,K-3522
12	K-4122	HEX FLANGE CRIMPED NUT KIT	4302321,4306520	1		

Group: MAINSHAFT ASSY

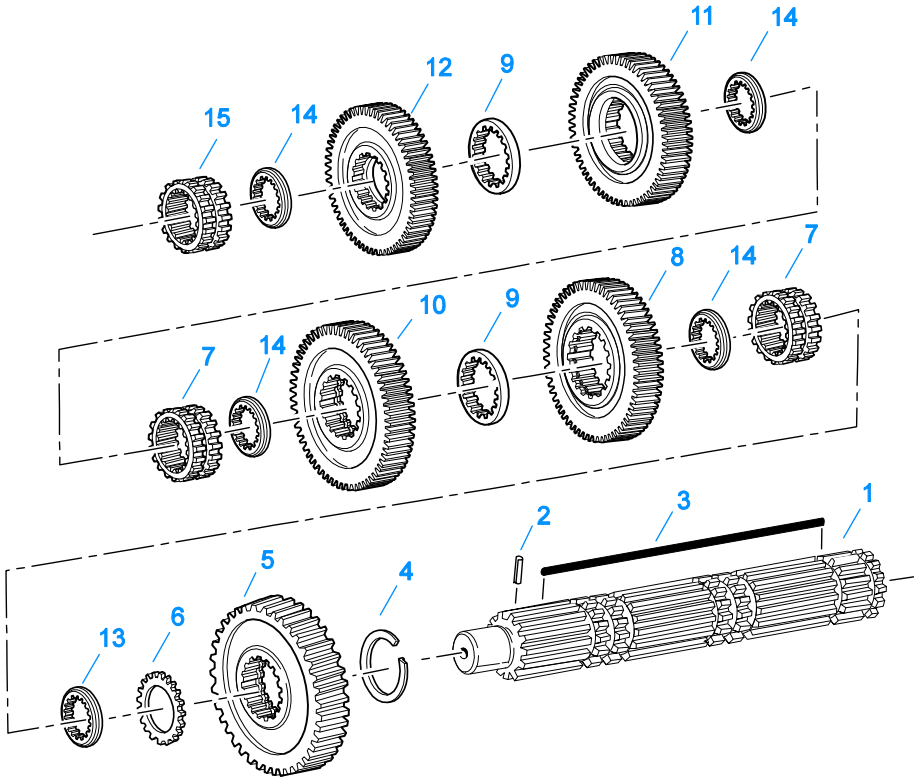

10337B-10-96

MAINSHAFT ASSY

Item	Current Part	Description	Replaced Part	Qty.	Notes	Kits/Assys Where Needed
1	S-2688	MAINSHAFT ASSY	4303404 ,4303913	1		
2	62504	ROLL PIN		1		S-2688
3	4304614	3-SIDED KEY	4300890	1		
4	14750	SNAP RING		1		K-3519,K-3522
5	23653	REVERSE GEAR-MAINSHAFT		1		
6	14749	SPACER		1		
7	4305997	SLIDING CLUTCH	4301407	2		
8	4303620	1ST GEAR-MAINSHAFT	4303618	1		
9	4303603	WASHER	4302397	2		
10	4303477	2ND GEAR-MAINSHAFT	4303414	1		
11	4302384	3RD GEAR-MAINSHAFT	4302385	1		
12	4302381	OD GEAR-MAINSHAFT	4302382 ,4302383	1		
13	4300830	WASHER .244-BLUE		1		
14	4302398	WASHER		4		
15	4305996	SLIDING CLUTCH	691922	1		K-3519

MISCELLANEOUS

Item	Current Part	Description	Replaced Part	Qty.	Notes	Kits/Assys Where Needed
	5586272	SHIFT DIAGRAM LABEL	5586268	1		
	71203	SILICONE LUBE		1	8 OZ (236.59 CC)-FLEET SIZE	
	71204	ADHESIVE SEALANT		1	0.5 CC (SINGLE APPLICATION SIZE)	
	71205	SEALANT		1	2 CC (SINGLE APPLICATION SIZE)	K-3519
	71206	SILICONE LUBE		1	4 CC (SINGLE APPLICATION SIZE)	K-3484

Group: OIL COOLER

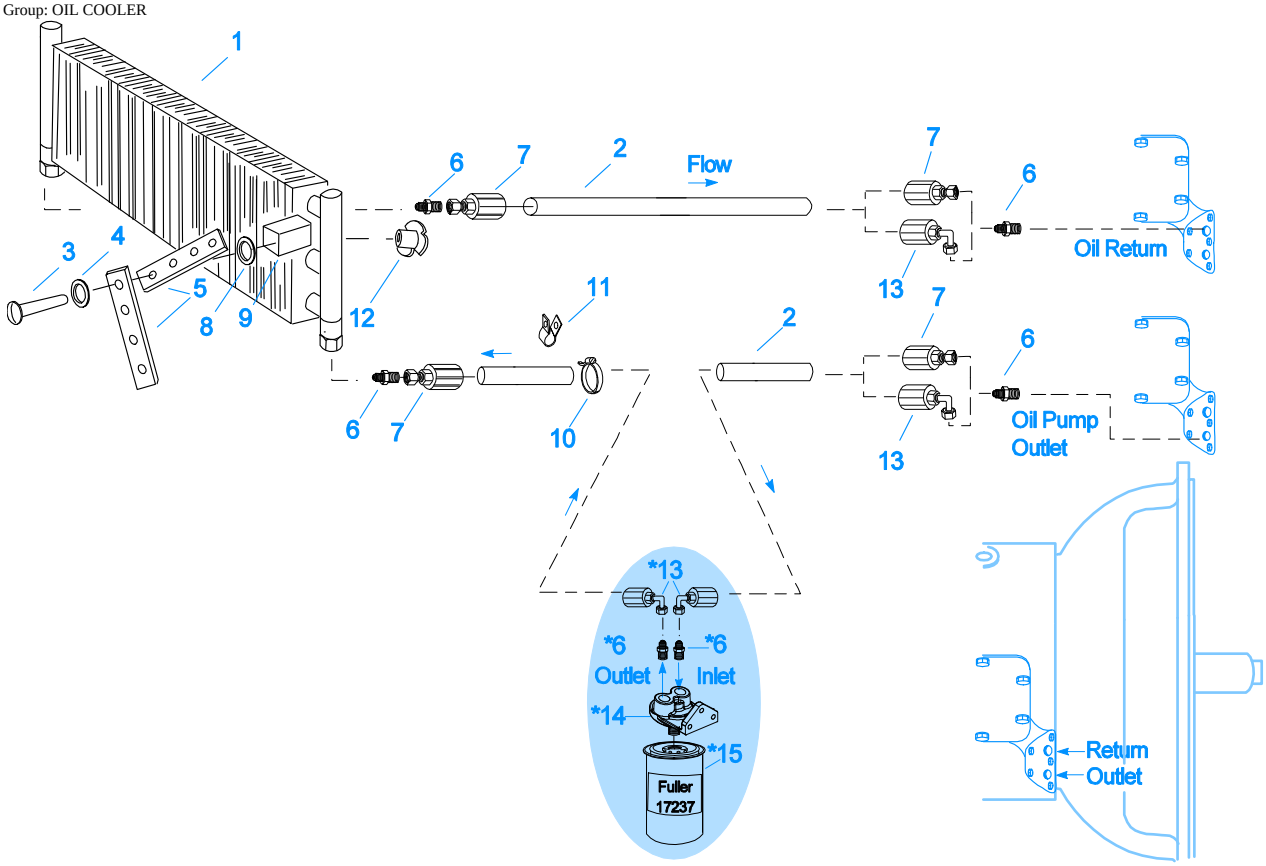

10525-4/92 Cooler

*Adding Oil Filter and parts as shown is optional.

Return / Outlet Location

OIL COOLER

Item	Current Part	Description	Replaced Part	Qty.	Notes	Kits/Assys Where Needed
1	18025	OIL COOLER		1		K-1956
2	19424	HOSE		1	25 FEET	K-1956
3	X-8-535	CAPSCREW		2	5/16"-16X2-1/2"	
4	X-3-506	LOCKWASHER		2	5/16"	
5	18211	BRACKET		4		K-1956
6	19419	CONNECTOR		6		K-1956,K-3441,S-1404
7	19415	SWIVEL		4		K-1956
8	X-10-501	WASHER		2	5/16"	
9	18209	PLUG-RUBBER MOUNT		2		K-1956
10	17190	STRAP		8		K-1956
11	19423	CLAMP		5		K-1956
12	18210	NUT		2		K-1956
13	19422	ELBOW		4		K-1956
14	S-1404	OIL FILTER	17238	1		
15	17237	FILTER ELEMENT		1		S-1404

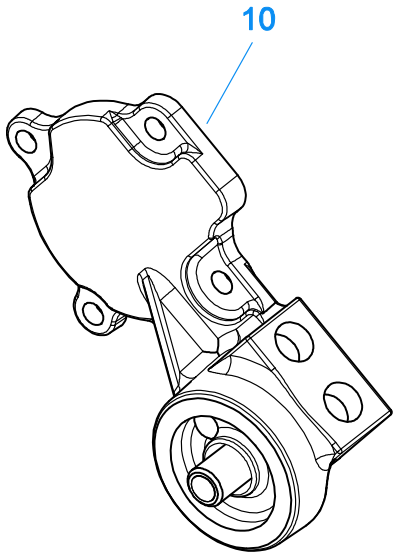

10539-3-00

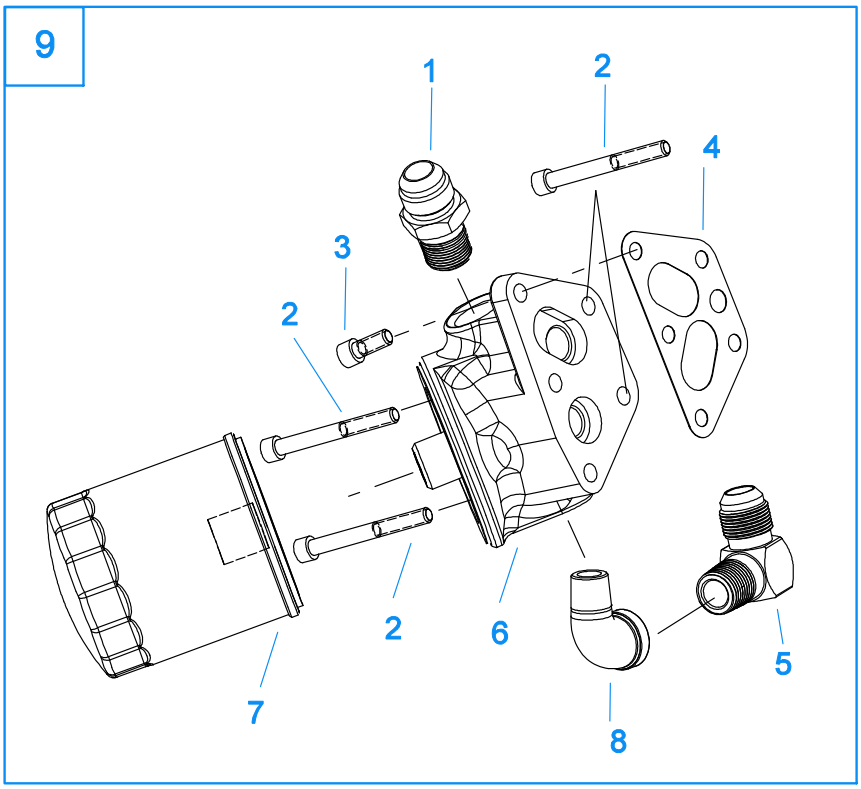

OIL FILTER

Item	Current Part	Description	Replaced Part	Qty.	Notes	Kits/Assys Where Needed
1	19419	CONNECTOR		1		K-1956,K-3441,S-1404
2	X-8-453	SCREW		4		K-3441
3	X-8-452	SCREW		1		K-3441
4	4304820	GASKET		1		K-3441
5	4301123	ELBOW		1		K-3441
6	K-3441	OIL FILTER/ADAPTER KIT	A - 7174	1		
7	4304827	OIL FILTER ELEMENT		1		K-3441
8	17007	ELBOW		1		K-3441
9	K-3441	OIL FILTER/ADAPTER KIT		1		
10	A-7300	AUX COUNTERSHAFT COVER ASSY		1		

Group: RANGE CYLINDER

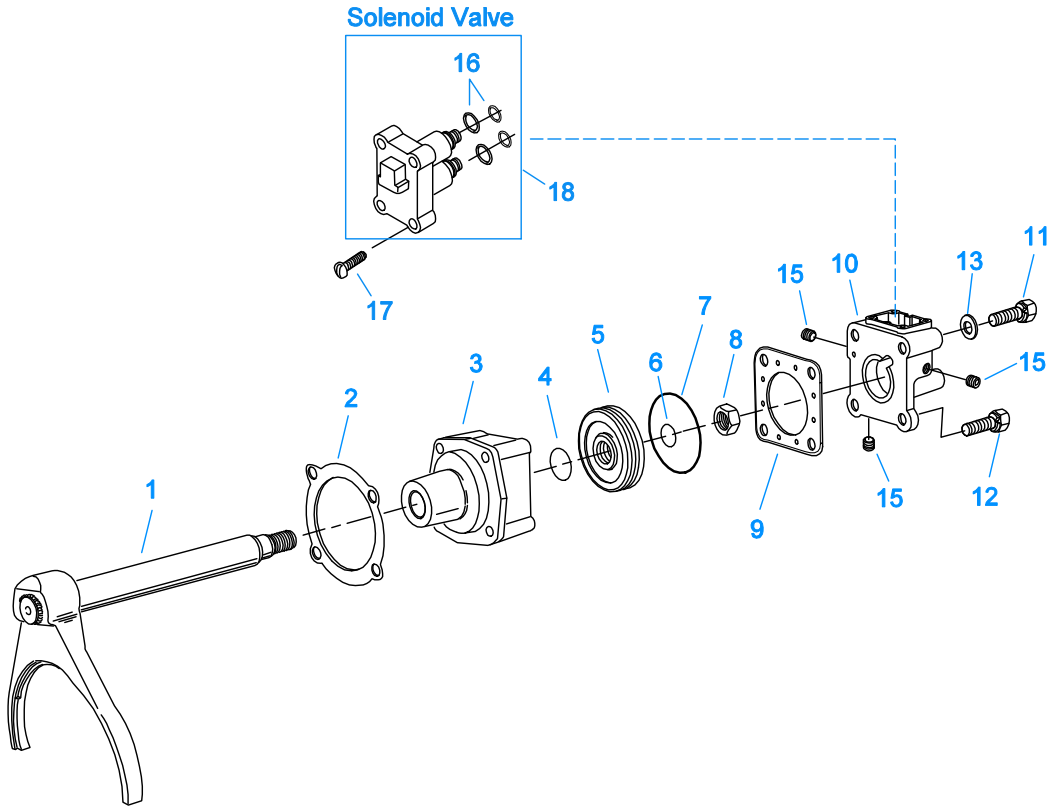

20539-03-01

RANGE CYLINDER

Item	Current Part	Description	Replaced Part	Qty.	Notes	Kits/Assys Where Needed
1	A-5474	SHIFT YOKE ASSY		1		
2	14347	GASKET		1		K-3484,K-3518
3	691348	RANGE CYLINDER		1		
4	14765	-O- RING		1		K-3484
5	14341	PISTON	23353	1		
6	14345	-O- RING		1		K-3484
7	14344	-O- RING		1		K-3484
8	X-1-1010	NUT		1	5/8"-18	
9	691955	GASKET	691440	1		K-3365,K-3484,K-3518
10	K-3365	RANGE CYL COVER KIT	691442	1		
11	X-8-647	CAPSCREW		2	3/8"-16X4-3/4"	
12	X-8L-605	CAPSCREW		2	3/8"-16X3"	
13	X-3-600	LOCKWASHER		2	3/8"	
15	X-12-208	PIPE PLUG		3	1/8" NPT	
16	K-2908	-O- RING KIT		1	FOR SOLENOID VALVE	
17	X-8-264	HEX FLANGE HEAD SCREW	X 8 259	4	#10-24 X 1 1/4	
18	K-3682	RANGE/SPLITTER VALVE KIT	5561801 ,5561804 ,K - 2907	1		

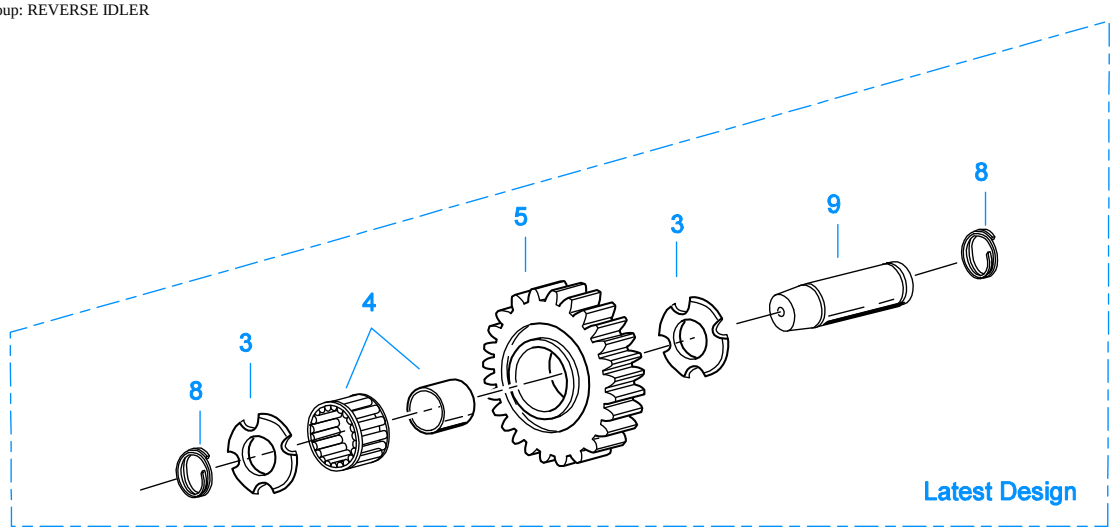

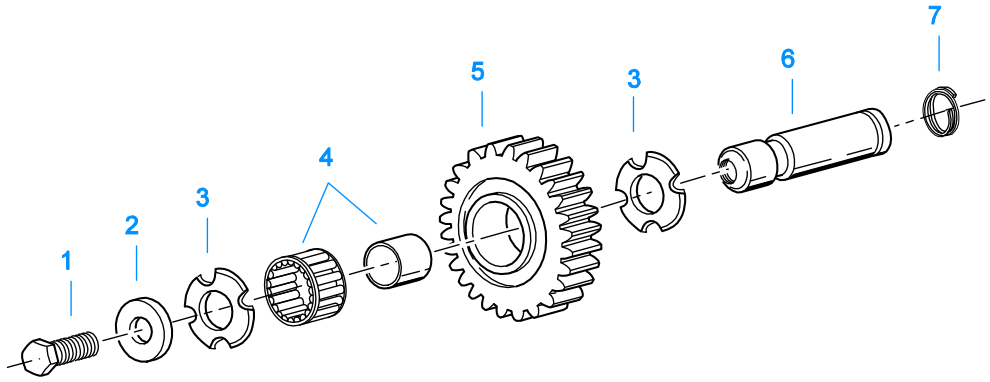

11382-3-97 RI

REVERSE IDLER

Item	Current Part	Description	Replaced Part	Qty.	Notes	Kits/Assys Where Needed
1	X-7-1008	CAPSCREW		2	5/8"-18X1-1/4	
2	14283	WASHER		2		
3	4302982	WASHER	14282	4		K-3209,S-2995,S-2998
4	14287	BEARING	4305020	2		K-3519,K-3522
5	16757	REVERSE IDLER GEAR	22409	2		
6	K-3209	IDLER SHAFT REPL KIT	16405 ,4302981 ,4305513	2		
7	4303336	RETAINING RING		2		K-3209
8	4303336	RETAINING RING		4		K-3209
9	4305513	IDLER SHAFT		2		K-3209

Group: SHIFT BAR HOUSING

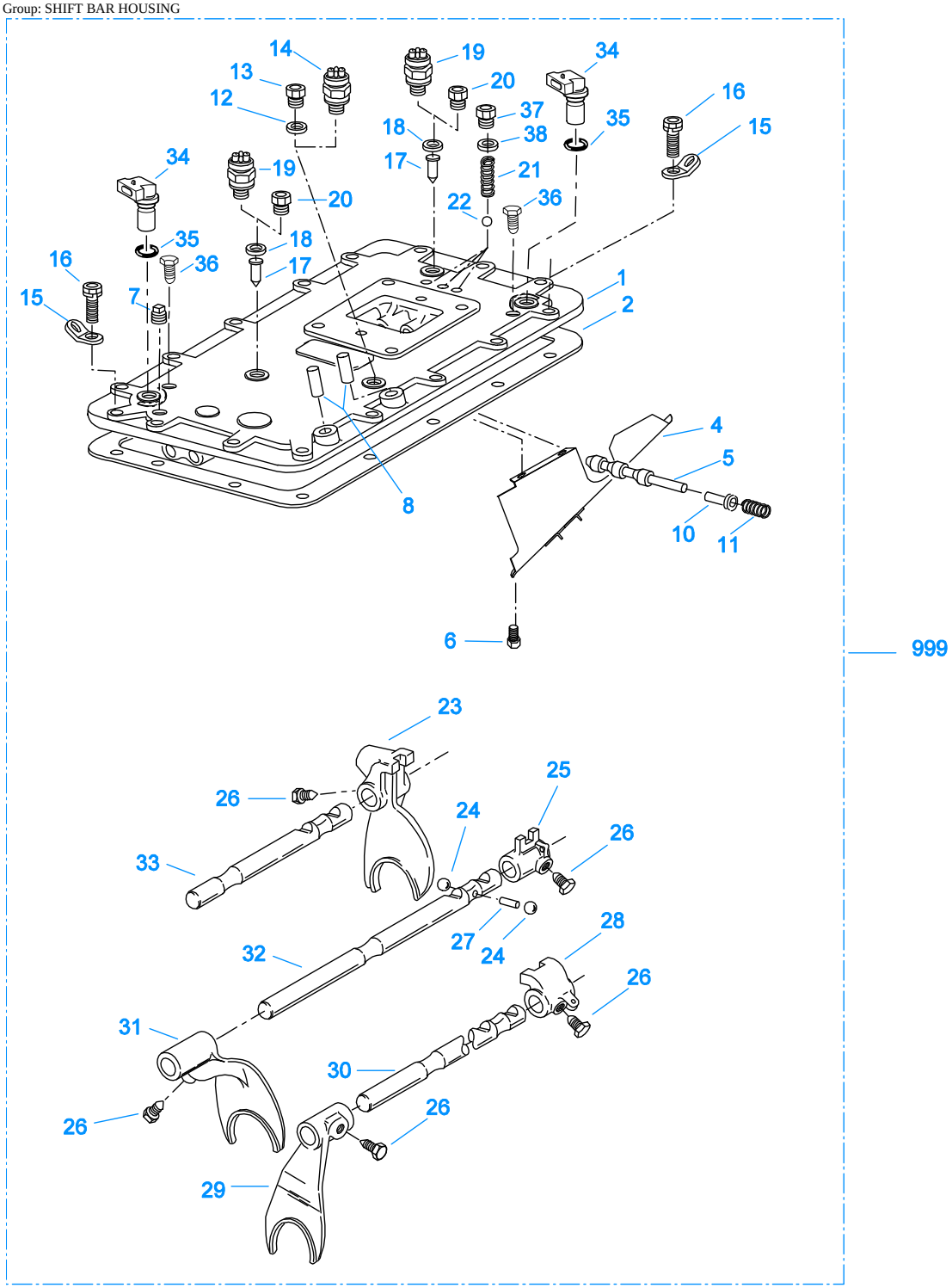

20235-03-01

SHIFT BAR HOUSING

Item	Current Part	Description	Replaced Part	Qty.	Notes	Kits/Assys Where Needed
1	S-2915	SHIFT BAR HOUSING ASSY	691532	1	HOUSING ONLY (DOES NOT INCLUDE SPEED SENSORS)	
2	4302676	GASKET	14918	1		K-3518,S-2905,S-2915,S-2927
4	20070	OIL TROUGH		1	WILL CAUSE INTERFERENCE ON UNITS BUILT WITH THE FORCED	S-2905

Item	Current Part	Description	Replaced Part	Qty.	Notes	Kits/Assys Where Needed
					LUBRICATION SYSTEM.	
5	20332	AIR VALVE SHAFT	17177	1		S-2905,S-2927
6	X-8-423	CAPSCREW		2	NOT TO BE USED ON UNITS BUILT WITH THE FORCED LUBRICATION SYSTEM.	K-3760
7	X-12-603	PIPE PLUG	X12 602	1	3/8" NPT	
8	4301378	DOWEL PIN		2		S-2905,S-2927
10	21966	PLUNGER		1		
11	4301372	SPRING		1		
12	17179	GASKET		1		S-2905,S-2915,S-2927
13	4303655	PLUG	17178	1		S-2905,S-2915,S-2927
14	22941	NEUTRAL LIGHT SWITCH	12639	1	SWITCH NORMALLY CLOSED	
15	20815	LIFTING EYE	17105	2		S-2956
16	X-8L-602	CAPSCREW		2	3/8"-16X1-1/2"	
16	X-8L-604	CAPSCREW		16	3/8"-16X1-1/4"- OR USE 14 PCS OF X-8L-604 WITH 2 PCS OF X-8L-602	
17	15899	PIN		2		
18	15900	GASKET		2		S-2905,S-2915,S-2927
19	22940	REVERSE LIGHT SWITCH	16830	1	SWITCH NORMALLY OPEN	
20	4303656	PLUG	15917	2		S-2905,S-2915,S-2927
21	691661	COMPRESSION SPRING		3		S-2905,S-2927
22	X-14-800	STEEL BALL		3	1/2"	
23	691712	SHIFT YOKE	4301376	1	REVERSE/1ST	S-2905,S-2927
24	X-14-1200	STEEL BALL		2	3/4"	
25	14658	SHIFT BLOCK		1	2ND/3RD	S-2905,S-2927
26	3220	LOCKSCREW		5		S-2905,S-2927
27	1634	INTERLOCK PIN		1		S-2905,S-2927
28	14659	SHIFT BLOCK		1	4TH/5TH	S-2905,S-2927
29	691601	SHIFT YOKE	4302212	1	4TH/5TH	S-2905,S-2927
30	4301366	YOKE BAR		1	4TH/5TH	S-2905,S-2927
31	691600	SHIFT YOKE	4302994	1	2ND/3RD	S-2905,S-2927
32	4301365	YOKE BAR		1	2ND/3RD	S-2905,S-2927
33	4301364	YOKE BAR		1	REVERSE/1ST	S-2905,S-2927
34	K-3231	SPEED SENSOR KIT	A - 6398 ,A - 6724	2	SINGLE PICK-UP (2 PIN)	
35	14142	-O- RING		2		K-3638,S-2905,S-2927
36	X-8C-409	CAPSCREW		2	1/4"-20X5/8"	
37	4303656	PLUG	15917	3		S-2905,S-2915,S-2927
38	15900	GASKET		3		S-2905,S-2915,S-2927
999	S-2905	SHIFT BAR HOUSING ASSY	691532	1	COMPLETE - FOR UNITS BUILT PRIOR TO THE FORCED LUBRICATION SYSTEM DESIGN	
999	S-2927	SHIFT BAR HOUSING ASSY	691532	1	COMPLETE - FOR UNITS BUILT WITH THE FORCED LUBRICATION SYSTEM DESIGN	

Group: SHIFT CONTROLS

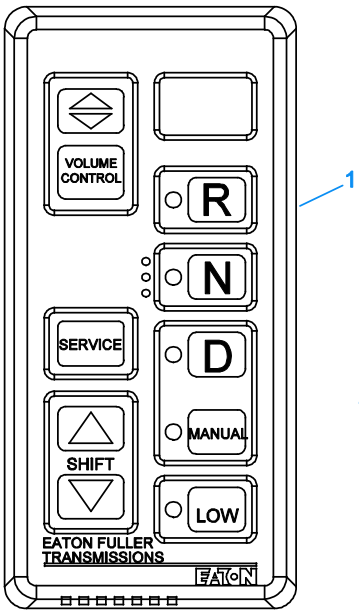

PUSHBUTONASSEMBLY

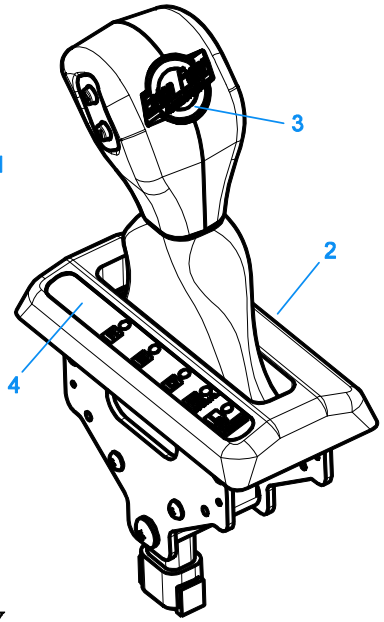

COBRA LEVER - only for use with 10MY559M Mack Swing Arm Bracket

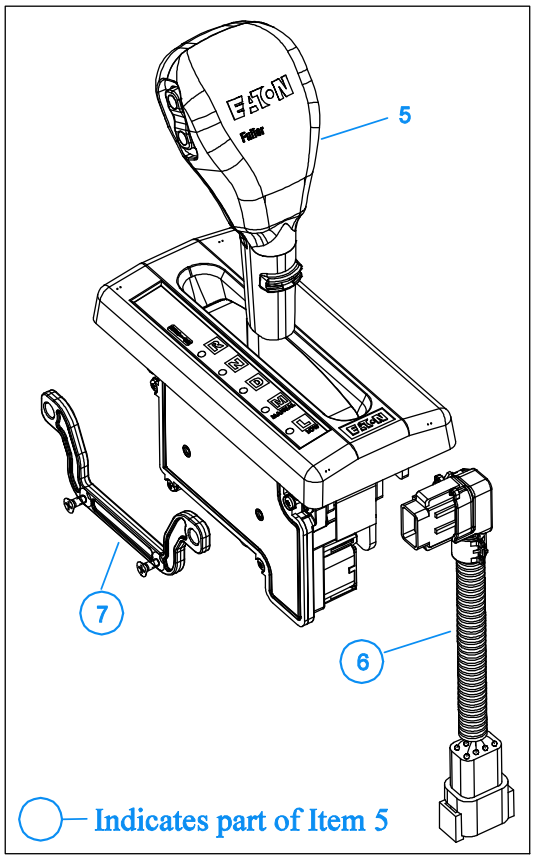

COBRA LEVER - Latest Design - for all applications with the exception of units using the 10MY559M Mack Swing Arm Bracket (see illustration to the left)

10209-06-09

SHIFT CONTROLS

Item	Current Part	Description	Replaced Part	Qty.	Notes	Kits/Assys Where Needed
1	S-2989	PUSHBUTTON ASSEMBLY	S - 2985	1		
1	S-2990	PUSHBUTTON ASSEMBLY		1	FOR USE WITH REMOTE LEVER	
2	K-3997	COBRA SHIFT LEVER KIT (RHO) W/MACK SWING ARM	4305447,K-3680	1	(LEFT HAND DRIVE), ALSO KNOWN AS (RHO) RIGHT HAND OPERATION - FOR UNITS USING THE MACK 10MY559M SWING ARM BRACKET	
3	5505111	SHIFT LEVER KNOB DECAL		1		
4	5505110	SHIFT LEVER POSITION STRIP		1		
5	K-3980	COBRA SHIFT LEVER KIT (RHO)	K-3680	1	(LEFT HAND DRIVE), ALSO KNOWN AS (RHO) RIGHT HAND OPERATION	
6	A-7982	JUMPER HARNESS ASSY		1		
7	K-3979	SPACER KIT		1	INCLUDES (4) SPACER MOUNTING SCREWS	

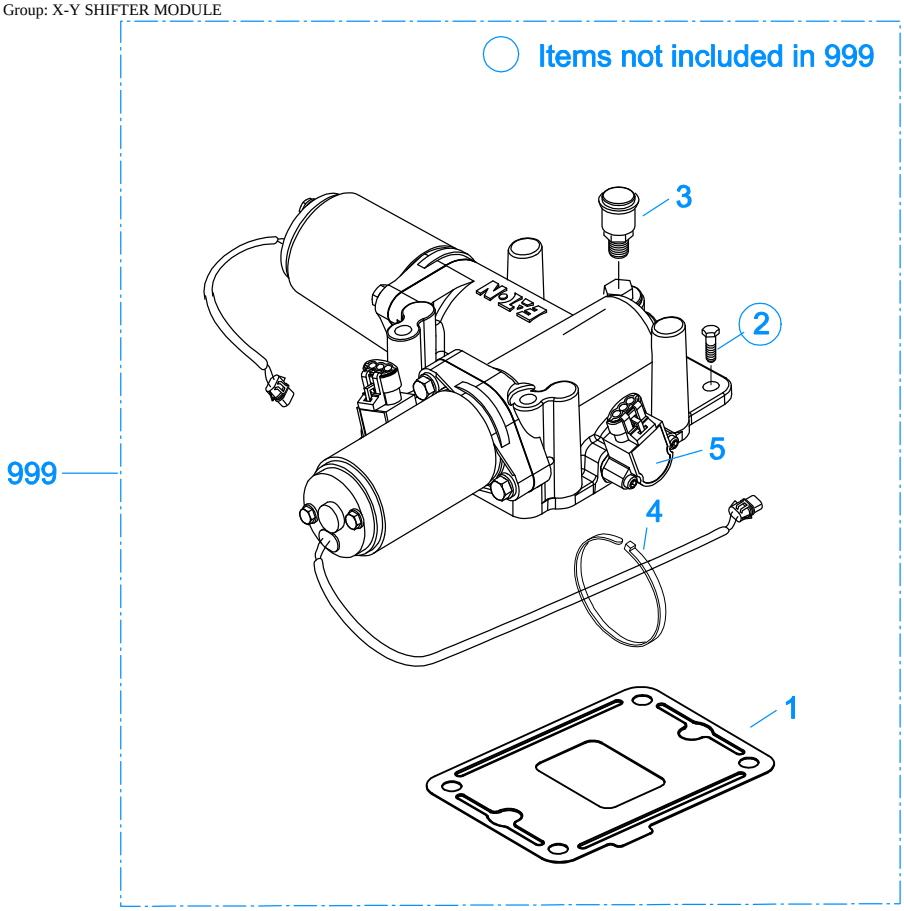

6	XY Shifter Repair Kit

20229-03-01

X-Y SHIFTER MODULE

Item	Current Part	Description	Replaced Part	Qty.	Notes	Kits/Assys Where Needed
1	4305452	GASKET	4301958	1		K-3436,K-4009
2	X-8C-615	CAPSCREW		4		
3	4304602	BREATHER	23605	1	1/4" NPT	
4	5559348	TY-RAP		2		K-3682,K-4118
5	K-3438	POSITION SENSOR KIT	691551 ,691926	2		
6	K-4009	XY SHIFTER REPAIR KIT		1		
999	K-3436	XY SHIFTER KIT	691381 ,A - 7034	1		