Roadranger®

More time on the road®

Illustrated Parts List

RTO-14710C-AS2
July 2011

For parts or service call us
Pro Gear & Transmission, Inc.

1 (877) 776-4600

(407) 872-1901

parts@eprogear.com

906 W. Gore St.

Orlando, FL 32805

Contents

How To Use The Illustrated Parts List 3
AUXILIARY DRIVE GEAR 4
CASE (AUX) 5
CASE (FRONT) 6
CONTROLLER ECU & HARNESS 9
COUNTERSHAFT & BRGS(AUX) 10
COUNTERSHAFT ASSY 11
FILTER REGULATOR 12
GEAR DISPLAY MODULE 13
INPUT SHAFT & DRIVE GEAR 14
INTEGRAL OIL PUMP 15
KITS & ASSEMBLIES 17
MAINSHAFT & SYNCHRO(AUX) 18
MAINSHAFT ASSY 19
MISCELLANEOUS 20
OIL COOLER 21
RANGE CYLINDER 22
REVERSE IDLER 23
SHIFT BAR HOUSING 24
SHIFT CONTROLS 26
X-Y SHIFTER MODULE 27

How To Use The Illustrated Parts List

The information contained in this document is subject to frequent updates. Therefore, for the latest information available, please visit the interactive Electronic Parts Catalog at www.roadranger.com/epc.

Model Designation or Nomenclature

- For information regarding Model Designation and Nomenclature, visit www.roadranger.com.

Kits and Assemblies (K/A's)

- Kits and Assemblies contain groups of individual or assembled parts developed for optimal replacement or repair of a service problem.
- Kits and Assemblies are shown with applicable parts groupings in the parts listings.

Identifying Kits and Assemblies

A- Part numbers beginning with the letter 'A' are pre-assembled Production Assemblies
K- Part numbers beginning with the letter 'K' are kits that are not assembled
S- Part numbers beginning with the letter 'S' are pre-assembled Service Assemblies

- Note: Some Production Assemblies do not begin with a letter prefix (Midrange only).

Illustrations

- Illustrations show parts in assembly groups.
- Item numbers on illustrations correspond with parts listings on pages adjacent to the illustration.
- Notes are included on illustrations where additional information is needed.

Parts Listing

Parts listings are defined by parts groupings and are broken down by service assemblies. Parts listings identify a part for servicing with the following categories

- **Item Number** - corresponding with numbers on illlustrations for part identification.
- **Current Part** - indentifies part as it is available for service.
- **Description** - specifies part name or description.
- **Replaced Part** - quantity quantity required for assembly.
- **Quantity** - defines unique characteristics or requirements.
- **Notes** - indicates Kits or Assemblies that contain a particular part.
- **Kits/Assy's Where Used**

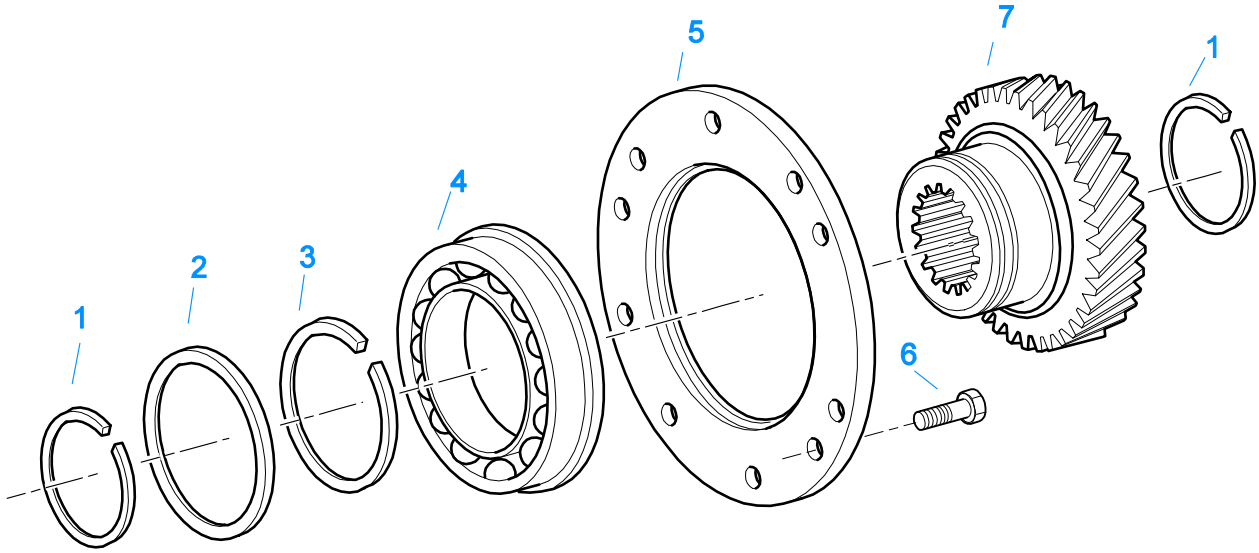

10480-12/92 Aux DG

AUXILIARY DRIVE GEAR

Item	Current Part	Description	Replaced Part	Qty.	Notes	Kits/Assys Where Needed
1	16763	SNAP RING		2		K-3486,K-3487
2	21320	SNAP RING RETAINER		1		K-3486,K-3487
3	16628	SNAP RING		1		
4	5566507-BOX	BEARING	5566504,5566507	1		K-3486,K-3487
5	16138	BEARING RETAINER		1		
6	X-8-645	CAPSCREW	X 8 612	6	3/8"-16X1"	
7	23159	AUXILIARY DRIVE GEAR	21321	1		

Group: CASE (AUX)

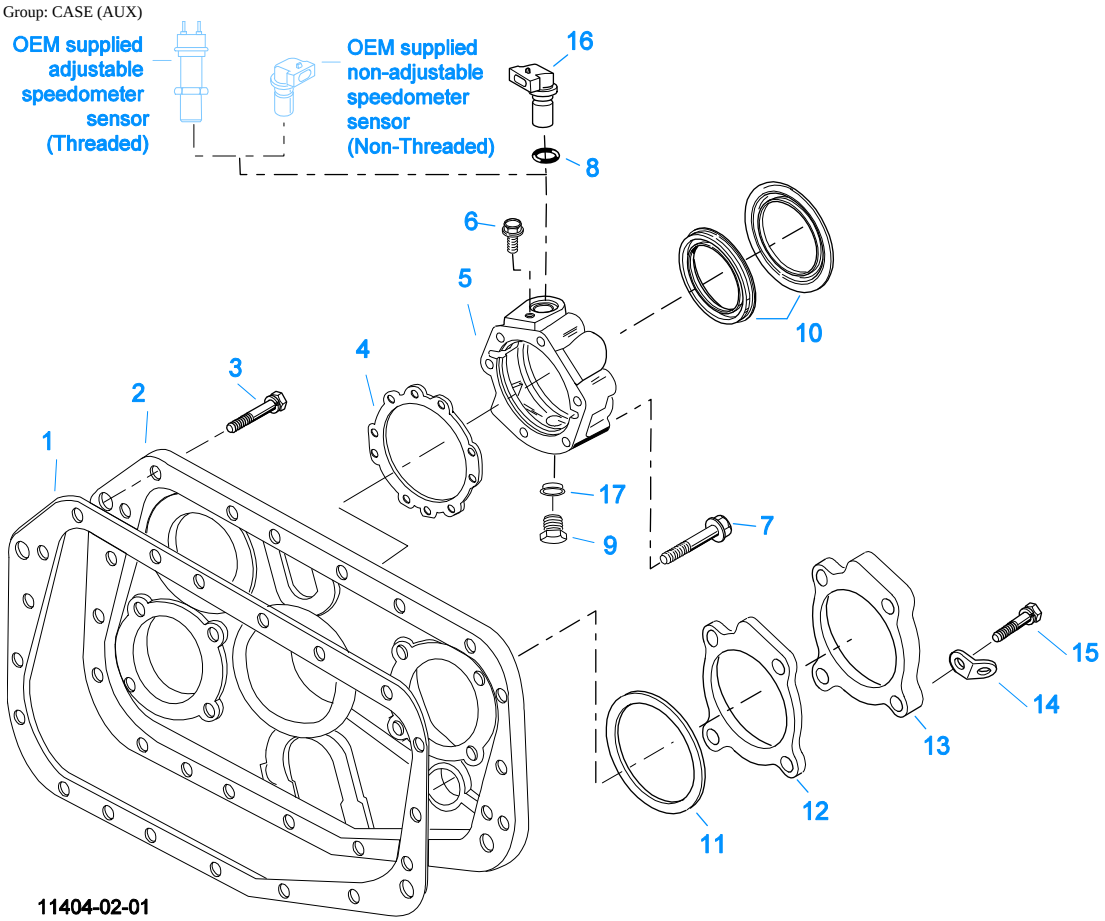

CASE (AUX)

Item	Current Part	Description	Replaced Part	Qty.	Notes	Kits/Assys Where Needed
1	14335	GASKET		1		K-3485,S-2926
2	22900	REAR HOUSING		1		
3	X-8L-602	CAPSCREW		16	3/8"-16X1-1/2"	
3	X-8L-614	CAPSCREW		2	3/8"-16X2"	
3	X-8L-616	CAPSCREW	X 8 616	1	3/8"-16X2-3/4"	
4	21364	GASKET		1		K-2262,K-3485,S-1992
5	S-1992	REAR BRG COVER ASSY	4302036	1		
6	X-8C-409	CAPSCREW		1	1/4"-20X5/8"	
7	X-8L-631	CAPSCREW	X 8 631	6	3/8"-16X3-1/2"	
8	14142	-O- RING		1		S-1992,S-2905
9	20224	PLUG-MAGNETIC		2		S-1992,S-2926
10	K-2262	OIL SEAL W/SLINGER	19109 20807 20808	1	"FOR MECHANICAL COVER"	K-3486,K-3487
11	K-2805	SHIM KIT	21452 K - 2106	1		K-3486,K-3487,S-2926
12	4305978	GASKET	4302246	2		K-3485,S-2926
13	4302320	COVER	21346	2		S-2926
14	20815	LIFTING EYE	17105	2		
15	X-8L-600	CAPSCREW		8	3/8"-16X1"	
16	K-3231	SPEED SENSOR KIT	A - 6398 ,A - 6724	1	SINGLE PICK-UP (2 PIN)	
16	K-3455	SPEED SENSOR KIT, DUAL	A - 7046 ,A - 7518	1	DUAL PICK-UP (4 PIN)	
17	4301954	SENSOR SEAL		2		S-1992

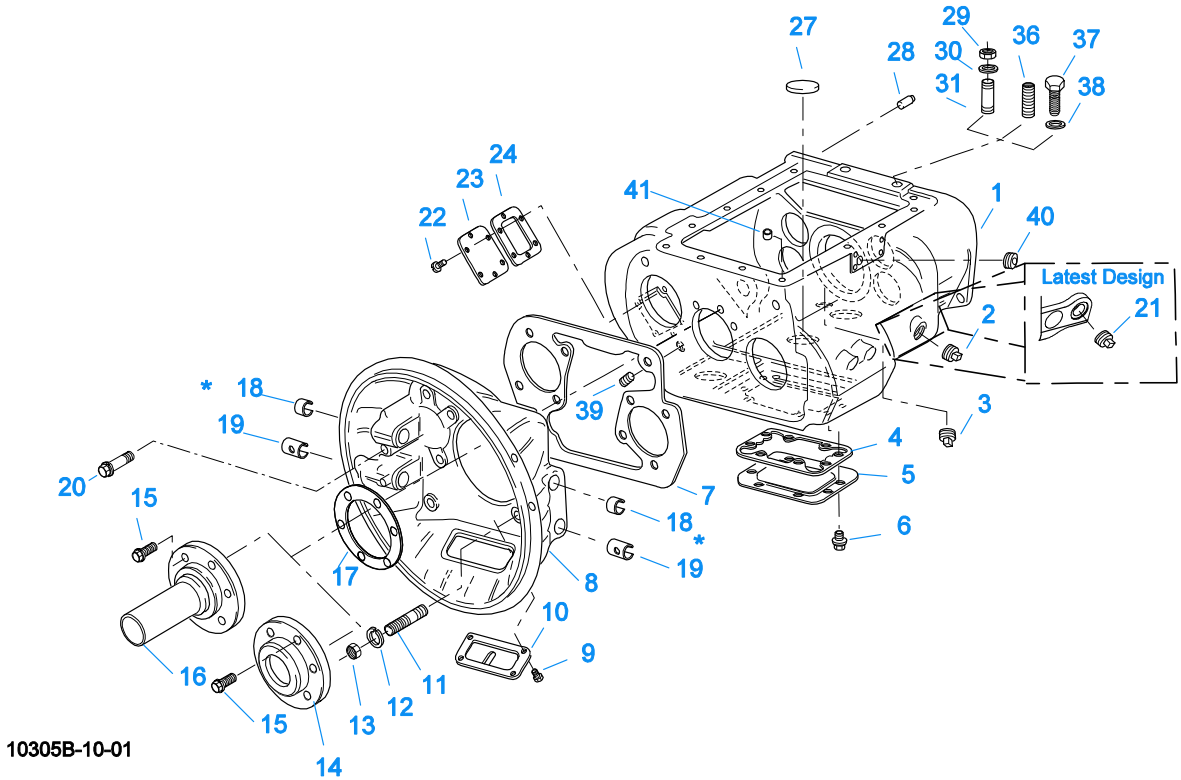

* Bushing quantity requirements: #1 Housing – Upper bore use 4 #12815 / Lower bore use 2 #8677.
#2 Housing – Upper bore use 2 #12815 and 1 #8677 / Lower bore use 2 #8677.

Note: Some part requirements are specific to #1 or #2 Aluminum or Iron Clutch Housings and Push or Pull type Clutch.

CASE (FRONT)

Item	Current Part	Description	Replaced Part	Qty.	Notes	Kits/Assys Where Needed
1	S-2998	CASE ASSY	4302218 ,4305765 ,S - 2075	1	FOR USE W/INTEGRAL PUMP	
2	X-12-2007	PIPE PLUG	X12 2006	1		
3	X-12-1207	PIPE PLUG	X12 1202 ,X12 1206	1	3/4" MAGNETIC	
4	4305310	GASKET	4302810	1		K-3485
5	4302809	PTO COVER	16596 ,4300571	1		
6	X-8-725	CAPSCREW	X 8 724	8	7/16"-14X7/8"	
7	4306584	CLUTCH HOUSING GASKET	4304815,4305668	1		K-3485
8	A-3713	CLUTCH HOUSING ASSY	A - 3700	1	#1 PUSH-PULL IRON	
8	A-3723	CLUTCH HOUSING ASSY	A - 3721 ,A - 3722	1	#2 PUSH-PULL IRON	
8	A-4772	CLUTCH HOUSING ASSY	A - 4344 ,A - 4771	1	#2 PUSH-PULL ALUM.	
8	A-6064	CLUTCH HOUSING ASSY	A - 4342 ,A - 4770 ,A - 6062 ,A - 6063 ,A - 6065	1	#1 PUSH-PULL ALUM.	
9	239614	SCREW	X-8L-509	4	5/16-18X.81 QUANTITY DEPENDENT ON DESIGN	
10	14506	HAND HOLE COVER		1	#2 PUSH	
10	14507	HAND HOLE COVER		1	#2 PULL	
10	4305230	HAND HOLE COVER	11453	1	#1 PULL	
10	4305231	HAND HOLE COVER	1565	1	#1 PUSH	
11	4306583	STUD	5966	6		
12	X-10-1005	WASHER	X 3 1000 ,X10 1000 ,X10 1004	6	1.23 X 6.60	
13	X-1-1012	HEX NUT		6	.625-18	
14	20550	FRONT BRG COVER		1	2" PULL	K-2468,K-4125
15	X-8L-604	CAPSCREW		6	3/8"-16X1-1/4"	
16	20549	FRONT BRG COVER		1	2" PUSH	
17	14311	GASKET		1		K-3485
18	12815	BUSHING		2	FOR #2 HOUSING UPPER	A-3713,A-3723,A-4772,A-6064,K-2468

Item	Current Part	Description	Replaced Part	Qty.	Notes	Kits/Assys Where Needed
18	12815	BUSHING		4	FOR #1 HOUSING UPPER	A-3713,A-3723,A-4772,A-6064,K-2468
18	8677	BUSHING		1	FOR #2 HOUSING UPPER	A-3713,A-3723,A-4772,A-6064
19	8677	BUSHING		2	FOR #1 AND #2 HOUSING LOWER	A-3713,A-3723,A-4772,A-6064
20	X-8C-830	HEX HEAD SCREW/WASHER ASSY	X-8C-826	4	.500-13 X 1.490, USE 2 PCS FOR IRON HOUSING, USE 4 PCS FOR ALUMINUM HOUSING	
20	X-8C-831	HEX HEAD SCREW/WASHER ASSY	X-8C-822	2	.500-13 X 3.460, FOR IRON HOUSING	
21	4304023	PLUG	4303747	1	1-1/16" MAGNETIC, O-RING INCLUDED	S-2998
22	X-8-686	CAPSCREW		6	3/8"-16X3/4"	
23	14575	PTO COVER	4302254	1		
24	4305309	GASKET	1684	1		K-3485
27	14373	MAGNET		3		S-2998
28	18128	PIN		2		
29	X-1-1012	HEX NUT		2	.625-18	
30	X-10-1005	WASHER	X 3 1000 ,X10 1000 ,X10 1004	2	1.23 X 6.60	
31	14554	STUD	1632 ,6579	2	5/8" X 2-3/16"	
36	23104	PLUG	1712	2		
37	X-8-1005	CAPSCREW		2	5/8"-11X1-1/4"	
38	20814	SPACER		2		
39	X-12-802	PIPE PLUG	X12 800	1	1/2"	
40	X-12-1207	PIPE PLUG	X12 1202 ,X12 1206	1	3/4" MAGNETIC	
41	691447	PIN		1		S-2998

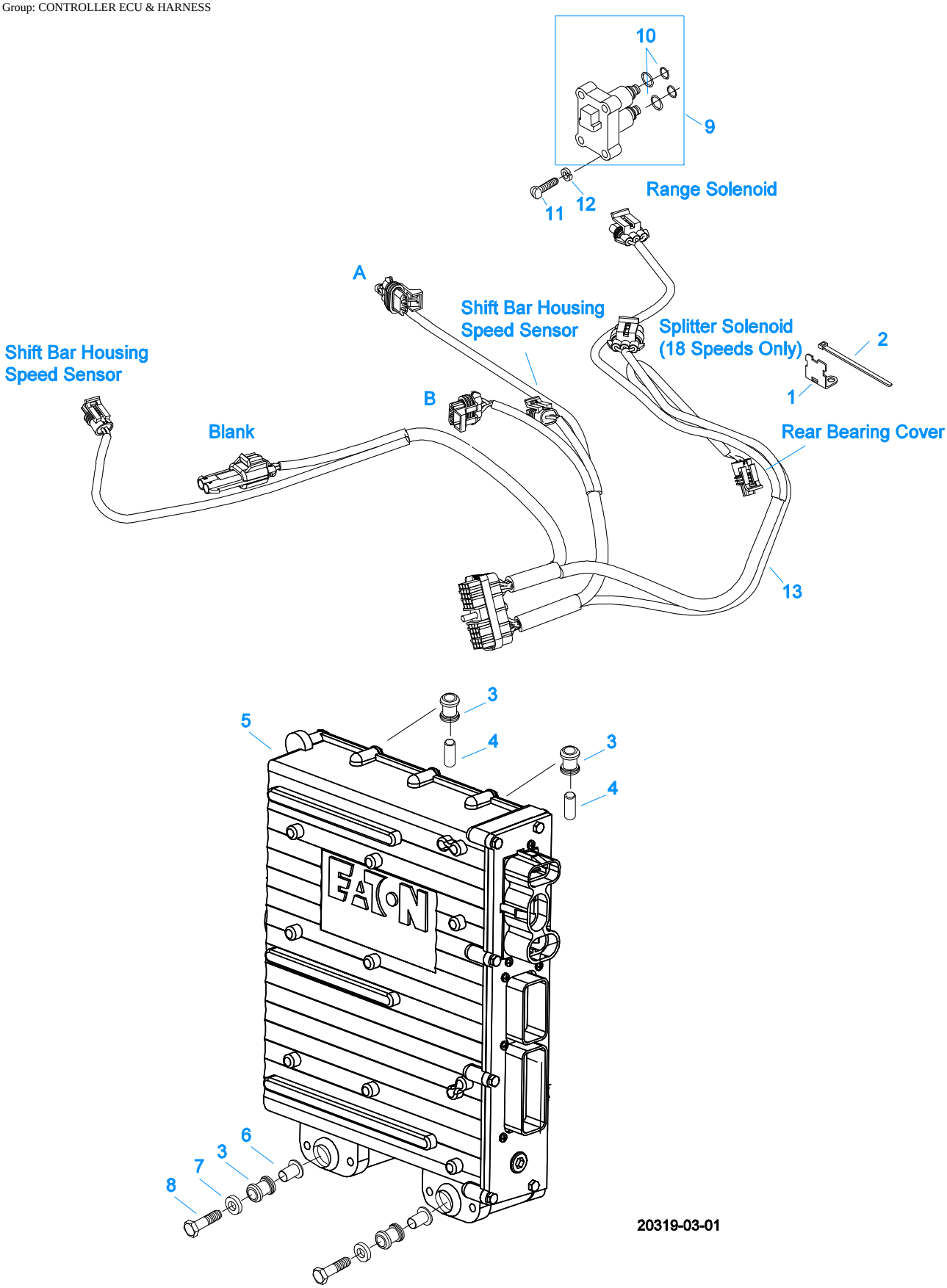
10
9
Range Solenoid
11
12
A
Shift Bar Housing
Speed Sensor
Splitter Solenoid
(18 Speeds Only)
2
1
Shift Bar Housing
Speed Sensor
B
Blank
Rear Bearing Cover
13
3
5
4
3
4
6
3
7
8
20319-03-01

CONTROLLER ECU & HARNESS

Item	Current Part	Description	Replaced Part	Qty.	Notes	Kits/Assys Where Needed
1	4301302	BRACKET		3		
2	5559348	TY-RAP		8		K-3682,K-4118
3	4301367	MOUNTING PAD		4		
4	4301378	DOWEL PIN		2		S-2905
5	K-3443RX	REMAN EXCHANGE TRANSMISSION CONTROLLER KIT	K-3443, K-3443R	1		
6	4301369	SLEEVE		2		
7	4302114	WASHER		2		
8	X-8-552	SCREW		2	5/16"-18X1-1/2"	
9	K-3682	RANGE/SPLITTER VALVE KIT	5561801 ,5561804 ,K - 2907	1		
10	K-2908	-O- RING KIT		1	FOR SOLENOID VALVE	
11	X-8-264	HEX FLANGE HEAD SCREW	X 8 259	4	#10-24 X 1 1/4	
12	X-3-301	LOCKWASHER		4	#10 PLAIN	
13	K-4118	TRANSMISSION HARNESS KIT	691664,K-3527	1		

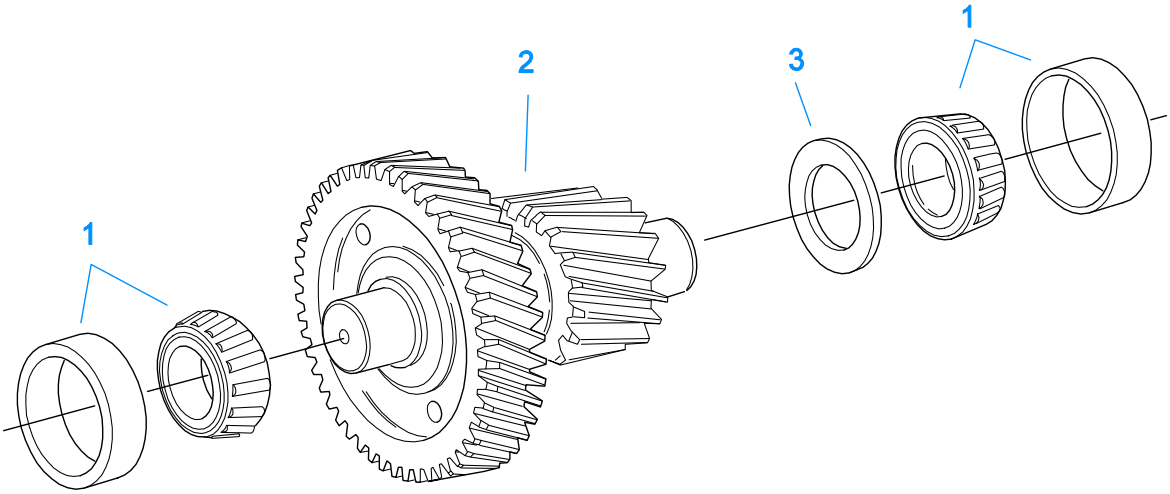

10440-1/92 Aux CS Helical

COUNTERSHAFT & BRGS(AUX)

Item	Current Part	Description	Replaced Part	Qty.	Notes	Kits/Assys Where Needed
1	4302074-BOX	BEARING	21343,4302074	4		K-3486,K-3487
2	A-6339	WELDED COUNTERSHAFT ASSY	A - 6073	2	C/S 4302091 - D/G 23160	
3	22903	SPACER		2		

Group: COUNTERSHAFT ASSY

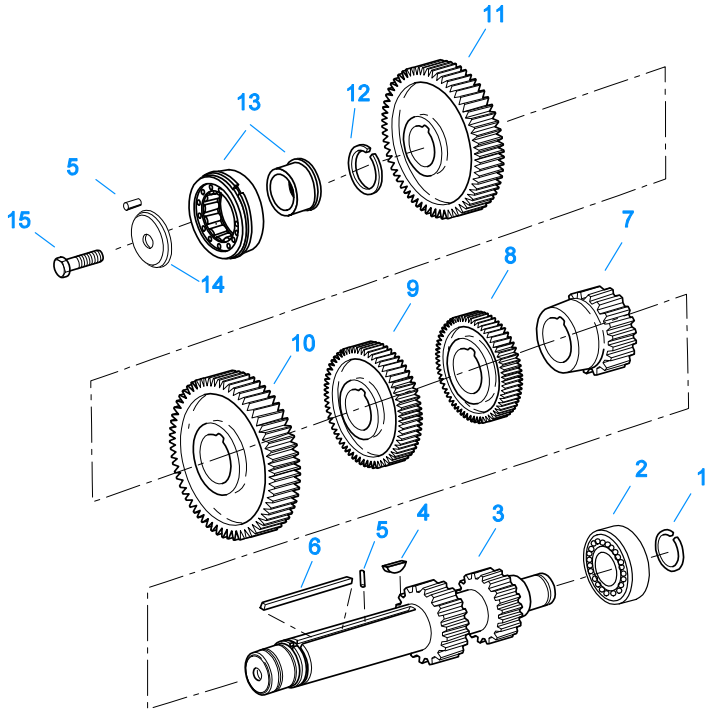

10341-1/92 CS/RT

COUNTERSHAFT ASSY

Item	Current Part	Description	Replaced Part	Qty.	Notes	Kits/Assys Where Needed
1	14317	SNAP RING		2		K-3486,K-3487
2	14366	BEARING		2		K-3486,K-3487
3	K-2942	CNTRSHFT-W/REV & 1ST	4301224 ,4301225	2		
4	X-6-E	KEY		2		
5	62511	ROLL PIN		4		
6	4304840	KEY	19673	2		
7	20382	2ND GEAR-CNTRSHFT	19269 ,4302103 ,4303512	2		
8	21264	3RD GEAR-CNTRSHFT	19623	2		
9	4300191	OD GEAR-CNTRSHFT	4305071	2		
10	15953	PTO GEAR - LOWER		1		
10	20840	PTO GEAR - UPPER	15952	1		
11	4305665	DRIVE GEAR-CNTRSHFT	21018,4305069	2		
12	19198	SNAP RING		2		
13	4304599	BEARING	4302677 4304598	2		K-3486,K-3487
14	4304605	RETAINER	19548	2	ROLL PIN NO LONGER REQUIRED	
15	X-7-1005	CAPSCREW		2	5/8"-18X1-3/4"	

Group: FILTER REGULATOR

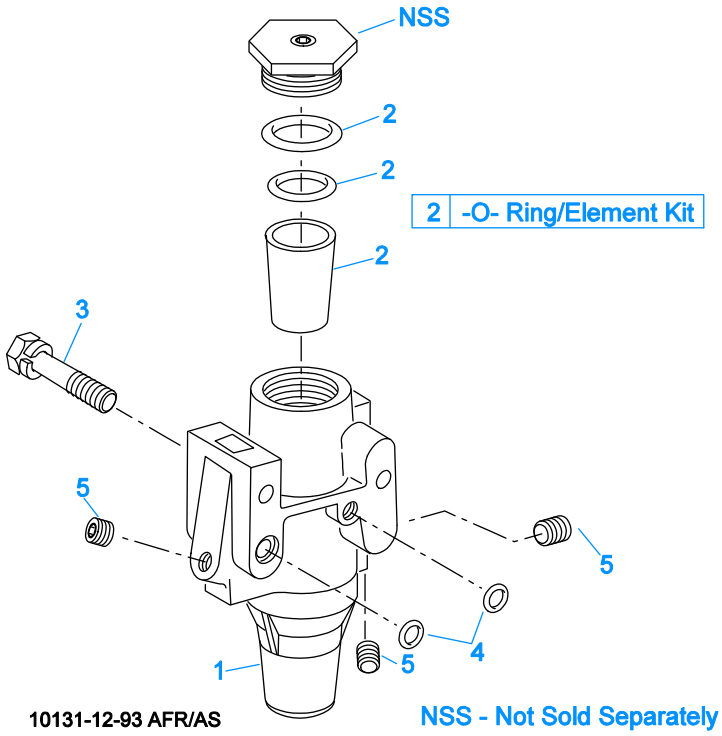

FILTER REGULATOR

Item	Current Part	Description	Replaced Part	Qty.	Notes	Kits/Assys Where Needed
1	K-2170	FILTER REG KIT	A - 5454	1		
2	K-1698	-O- RING/ELEMENT KIT		1	FOR FILTER REGULATOR	
3	X-8C-412	CAPSCREW	X 8S 412	2	1/4"-20X2-1/4"	
4	15114	-O- RING		2		K-2170,K-3365,K-3484
5	X-12-208	PIPE PLUG		3	1/8" NPT	

Group: GEAR DISPLAY MODULE

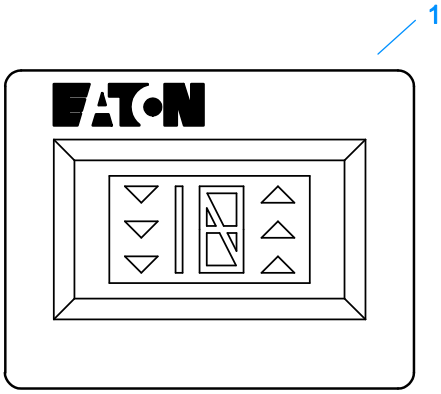

30317-03-01

GEAR DISPLAY MODULE

Item	Current Part	Description	Replaced Part	Qty.	Notes	Kits/Assys Where Needed
1	K-3199	DRIVER DISPLAY MODULE	4302640	1		

Group: INPUT SHAFT & DRIVE GEAR

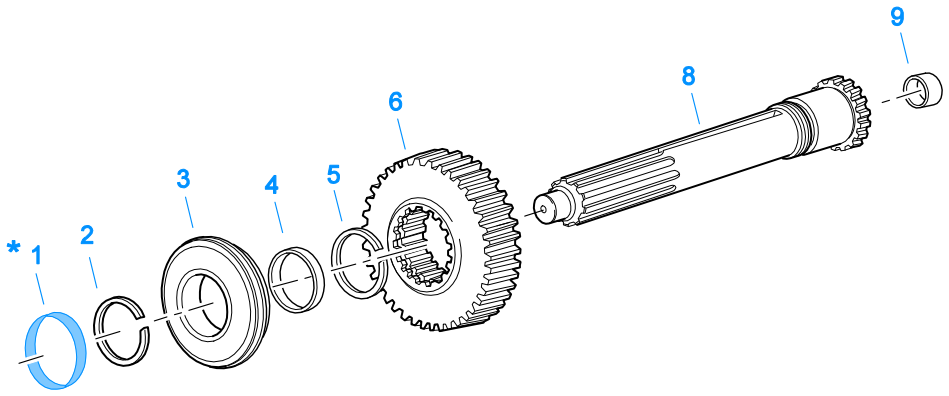

* For Shipping Only -- Do Not Replace

*

10370-1/92 IS

INPUT SHAFT & DRIVE GEAR

Item	Current Part	Description	Replaced Part	Qty.	Notes	Kits/Assys Where Needed
1	23559	SHIPPING SEAL		1	NOT SOLD FOR SERVICE	
2	16980	SNAP RING		1		K-2468,K-3486,K-4125
3	81504	BEARING		1		K-2468,K-3486,K-3487,K-4125
4	16463	SPACER		1		
5	14750	SNAP RING		1		K-2468,K-3486,K-3487,K-4125
6	4305910	MAIN DRIVE GEAR	4300238, 4305068	1		
8	S-1659	INPUT SHAFT	20535 23566 4302661	1	2" PULL - USE W/FBC 20550	K-2468,K-3486,K-4125
8	S-1660	INPUT SHAFT	20536 ,23567	1	2" PUSH - USE W/FBC 20549	
9	16566	BUSHING		1		K-3487,S-1659,S-1660

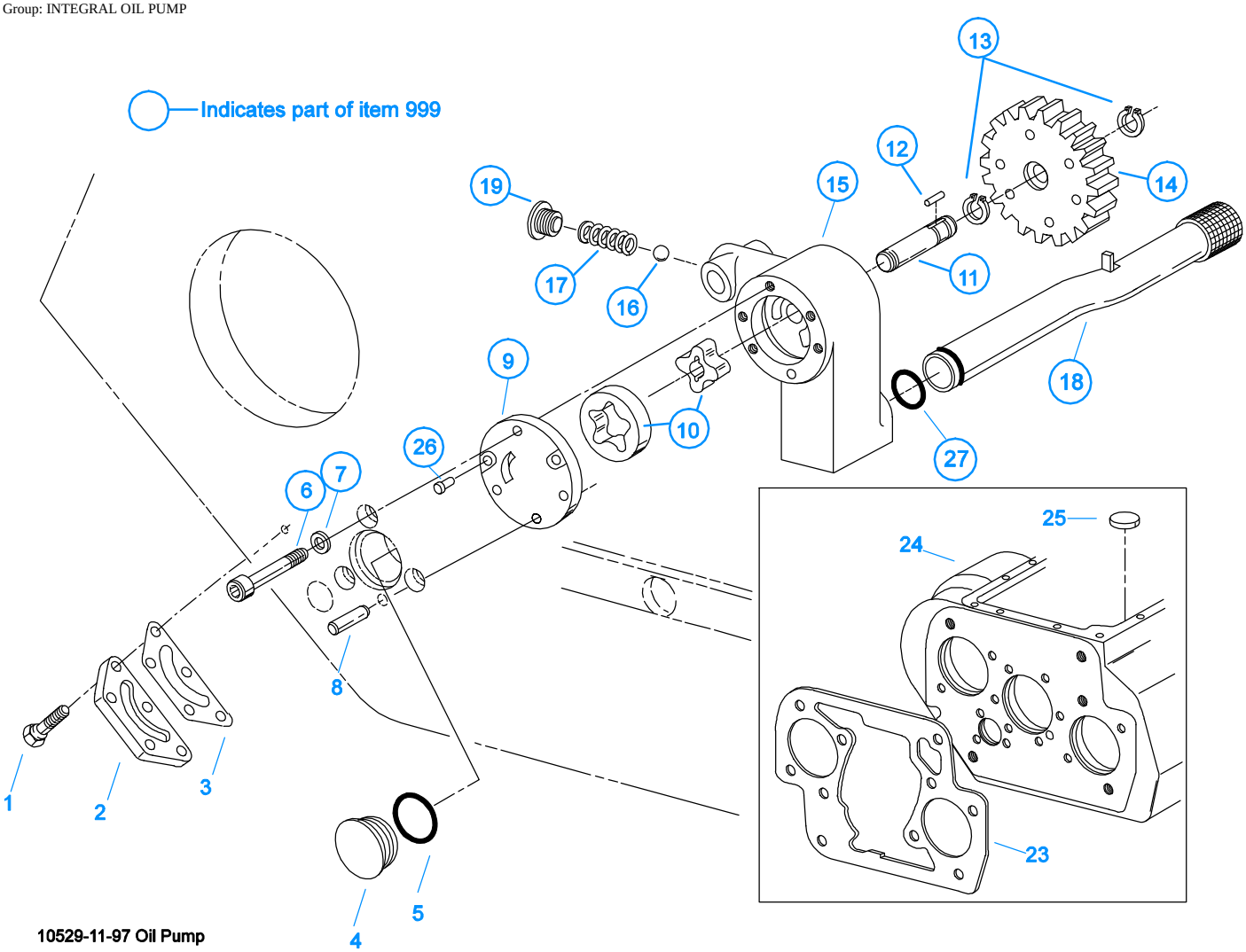

INTEGRAL OIL PUMP

Item	Current Part	Description	Replaced Part	Qty.	Notes	Kits/Assys Where Needed
1	X-8C-409	CAPSCREW		5	1/4"-20X5/8"	
2	K-2402	COVER & SCREW KIT	20513 ,4300751	1		
3	20514	GASKET		1		K-2402
4	20823	PLUG		1		
5	14765	-O- RING		1		K-3484
6	X-8-448	SCREW	X 8 445	3	1/4"-20X1-1/4"	
7	20824	WASHER		3		K-3367
8	20825	DOWEL PIN		1		
9	4303773	RETAINER		1		
10	K-3367	OIL PUMP KIT	4301829 ,4301948 ,4303776 ,4304529 ,4304572 A - 6963 ,A - 7173	1		
11	K-3367	OIL PUMP KIT	4301829 ,4301948 ,4303776 ,4304529 ,4304572 A - 6963 ,A - 7173	1		
12	20509	KEY		1		
13	14853	SNAP RING		2		
14	4303774	PUMP DRIVE GEAR	4304880	1		
15	K-3367	OIL PUMP KIT	4301829 ,4301948 ,4303776 ,4304529 ,4304572 A - 6963 ,A - 7173	1		
16	X-14-700	STEEL BALL		1	7/16"	

Item	Current Part	Description	Replaced Part	Qty.	Notes	Kits/Assys Where Needed
17	4303775	SPRING		1		
18	4305713	SUCTION TUBE	4304628	1	O-RING INCLUDED ON SUCTION TUBE	K-3367
19	4304629	PLUG		1		
23	4306584	CLUTCH HOUSING GASKET	4304815,4305668	1		K-3485
24	S-2998	CASE ASSY	4302218 ,4305765 ,S - 2075	1	FOR USE W/INTEGRAL PUMP	
25	14373	MAGNET		3		S-2998
26	X-8-447	SCREW		2		
27	20225	-O- RING		1		
999	K-3367	OIL PUMP KIT	4301829 ,4301948 ,4303776 ,4304529 ,4304572 A - 6963 ,A - 7173	1		

KITS & ASSEMBLIES

Item	Current Part	Description	Replaced Part	Qty.	Notes	Kits/Assys Where Needed
	K-1698	-O- RING/ELEMENT KIT		1	FOR FILTER REGULATOR	
	K-1956	COOLER INSTLN KIT		1		
	K-2170	FILTER REG KIT	A - 5454	1		
	K-2262	OIL SEAL W/SLINGER	19109 20807 20808	1	"FOR MECHANICAL COVER"	K-3486,K-3487
	K-2402	COVER & SCREW KIT	20513 ,4300751	1		
	K-2468	CLUTCH INSTALLATION KIT		1	FOR USE WITH S-1659 INPUT SHAFT ASSY AND 81504 INPUT SHAFT BEARING	
	K-2805	SHIM KIT	21452 K - 2106	1		K-3486,K-3487,S-2926
	K-2908	-O- RING KIT		1	FOR SOLENOID VALVE	
	K-2942	COUNTERSHAFT REPL KIT	4301224 ,4301225	1		
	K-3231	SPEED SENSOR KIT	A - 6398 ,A - 6724	1	SINGLE PICK-UP (2 PIN)	
	K-3365	RANGE CYL COVER KIT	691442	1		
	K-3367	OIL PUMP KIT	4301829 ,4301948 ,4303776 ,4304529 ,4304572 A - 6963 ,A - 7173	1		
	K-3436	XY SHIFTER KIT	691381 ,A - 7034	1		
	K-3438	POSITION SENSOR KIT	691551 ,691926	1		
	K-3443RX	REMAN EXCHANGE TRANSMISSION CONTROLLER KIT	K-3443, K-3443R	1		
	K-3455	SPEED SENSOR KIT, DUAL	A - 7046 ,A - 7518	1	DUAL PICK-UP (4 PIN)	
	K-3484	O-RING KIT - RANGE		1		K-3486,K-3487
	K-3485	GASKET KIT		1		K-3486,K-3487
	K-3486	BASIC OVERHAUL KIT		1		
	K-3487	BASIC REBUILD KIT		1		
	K-3492	SYNCHRONIZER KIT	K - 2446	1		
	K-3494	SYNCHRONIZER REPLACEMENT KIT	K - 2448	1	SLIDING CLUTCH INCLUDED IN KIT	
	K-3651	OIL SEAL TOOL KIT		1		
	K-3682	RANGE/SPLITTER VALVE KIT	5561801 ,5561804 ,K - 2907	1		
	K-3979	SPACER KIT		1	INCLUDES (4) SPACER MOUNTING SCREWS	
	K-3980	COBRA SHIFT LEVER KIT (RHO)	K-3680	1	(LEFT HAND DRIVE), ALSO KNOWN AS (RHO) RIGHT HAND OPERATION	
	K-3997	COBRA SHIFT LEVER KIT (RHO) W/MACK SWING ARM	A - 7181,K-3680	1	(LEFT HAND DRIVE), ALSO KNOWN AS (RHO) RIGHT HAND OPERATION - FOR UNITS USING THE MACK 10MY559M SWING ARM BRACKET	
	K-4118	TRANSMISSION HARNESS KIT	691664,K-3527	1		
	K-4125	CLUTCH INSTALLATION KIT (RT), HYDRAULIC RELEASE		1	STANDARD RT INPUT SHAFT AND YOKE FOR HYDRAULIC CLUTCH RELEASE	
	S-1404	OIL FILTER	17238	1		
	S-1659	INPUT SHAFT	20535 23566 4302661	1	2" PULL - USE W/FBC 20550	K-2468,K-3486,K-4125
	S-1660	INPUT SHAFT	20536 ,23567	1	2" PUSH - USE W/FBC 20549	
	S-1992	REAR BRG COVER ASSY	4302036	1		
	S-2688	MAINSHAFT ASSY	4303404 ,4303913	1		
	S-2905	SHIFT BAR HOUSING ASSY	691532	1	COMPLETE	
	S-2915	SHIFT BAR HOUSING ASSY	691532	1	HOUSING ONLY (DOES NOT INCLUDE SPEED SENSORS)	
	S-2926	RANGE SECTION ASSY		1	"C" RATIO	
	S-2989	PUSHBUTTON ASSEMBLY	S - 2985	1		
	S-2990	PUSHBUTTON ASSEMBLY		1	FOR USE WITH REMOTE LEVER	
	S-2998	CASE ASSY	4302218 ,4305765 ,S - 2075	1	FOR USE W/INTEGRAL PUMP	

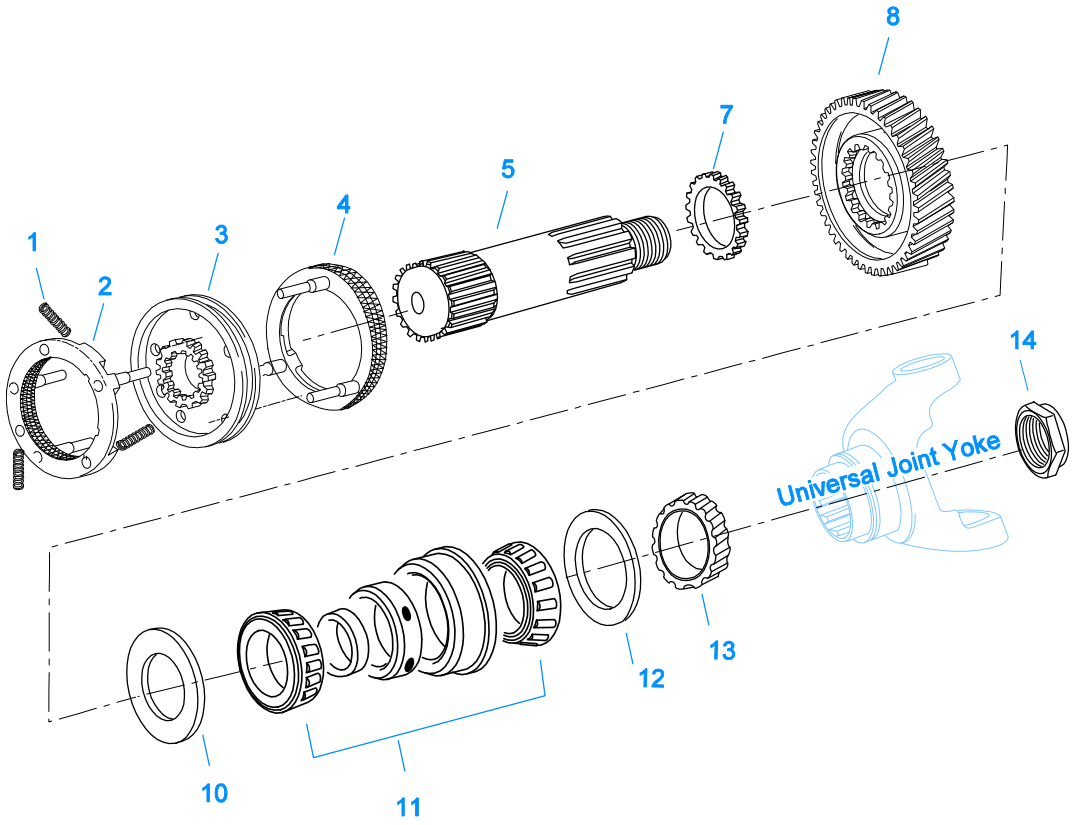

10421-12-93

MAINSHAFT & SYNCHRO(AUX)

Item	Current Part	Description	Replaced Part	Qty.	Notes	Kits/Assys Where Needed
1	14897	SPRING		3		K-3486,K-3487,K-3492,K-3494
2	A-7331	SYNCHRONIZER ASSY	4304396 4304397 A - 5917	1	HI RANGE	K-3492,K-3494
3	20323	SLIDING CLUTCH		1		K-3494
4	A-7254	SYNCHRONIZER ASSEMBLY	A - 4937 A - 5876	1	LO RANGE	K-3492,K-3494
5	4300312	AUXILIARY MAINSHAFT	22970	1		
7	22899	WASHER		1		
8	4302090	REDUCTION GEAR	4301227	1		
10	22898	SPACER		1		
11	21356-BOX	BEARING	21356	1		K-3486,K-3487
12	22969	SPACER		1		
13	20191	ROTOR		1		
14	22254	NUT	11956	1		S-2926

Group: MAINSHAFT ASSY

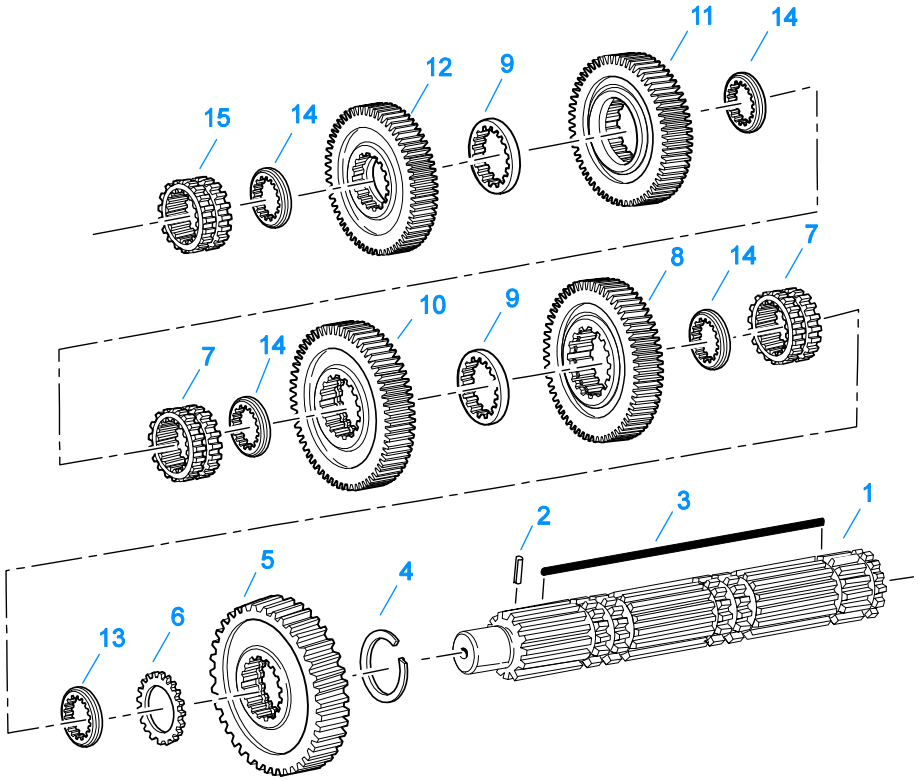

10337B-10-96

MAINSHAFT ASSY

Item	Current Part	Description	Replaced Part	Qty.	Notes	Kits/Assys Where Needed
1	S-2688	MAINSHAFT ASSY	4303404 ,4303913	1		
2	62504	ROLL PIN		1		S-2688
3	4304614	3-SIDED KEY	4300890	1		
4	14750	SNAP RING		1		K-2468,K-3486,K-3487,K-4125
5	4301222	REVERSE GEAR-MAINSHAFT		1		
6	14749	SPACER		1		
7	4305997	SLIDING CLUTCH	4301407	2		
8	4303497	1ST GEAR-MAINSHAFT	4303498	1		
9	4303603	WASHER	4302397	2		
10	4303502	2ND GEAR-MAINSHAFT		1		
11	4302396	3RD GEAR-MAINSHAFT		1		
12	4302393	OD GEAR-MAINSHAFT	4305070	1		
13	4300830	WASHER .244-BLUE		1		
14	4302398	WASHER		4		
15	4305996	SLIDING CLUTCH	691922	1		K-3486

MISCELLANEOUS

Item	Current Part	Description	Replaced Part	Qty.	Notes	Kits/Assys Where Needed
	5586260	SHIFT DIAGRAM LABEL		1		S-2989
	71203	SILICONE LUBE		1	8 OZ (236.59 CC)-FLEET SIZE	
	71204	ADHESIVE SEALANT		1	0.5 CC (SINGLE APPLICATION SIZE)	
	71205	SEALANT		1	2 CC (SINGLE APPLICATION SIZE)	K-3486
	71206	SILICONE LUBE		1	4 CC (SINGLE APPLICATION SIZE)	K-3484

Group: OIL COOLER

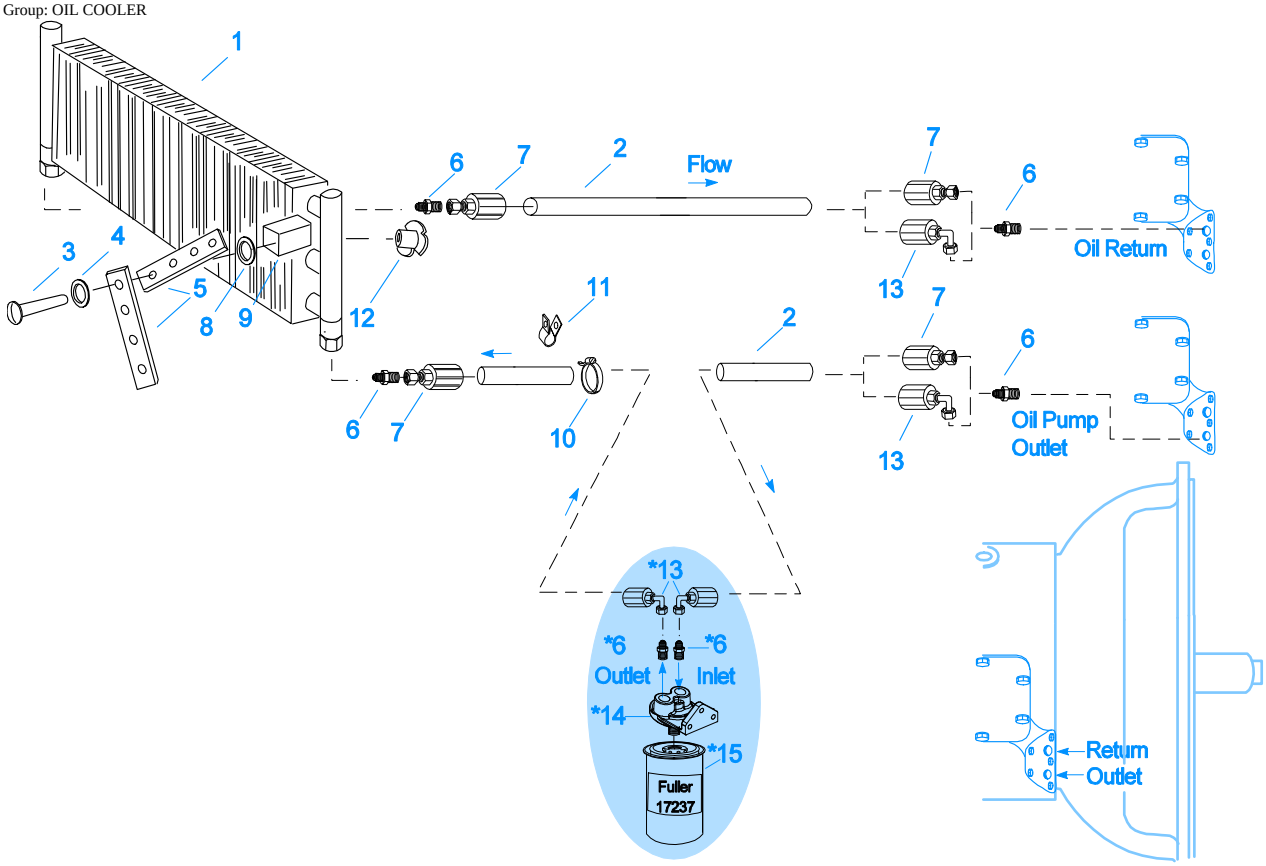

10525-4/92 Cooler

*Adding Oil Filter and parts as shown is optional.

Return / Outlet Location

OIL COOLER

Item	Current Part	Description	Replaced Part	Qty.	Notes	Kits/Assys Where Needed
1	18025	OIL COOLER		1		K-1956
2	19424	HOSE		1	25 FEET	K-1956
3	X-8-535	CAPSCREW		2	5/16"-16X2-1/2"	
4	X-3-506	LOCKWASHER		2	5/16"	
5	18211	BRACKET		4		K-1956
6	19419	CONNECTOR		6		K-1956,S-1404
7	19415	SWIVEL		4		K-1956
8	X-10-501	WASHER		2	5/16"	
9	18209	PLUG-RUBBER MOUNT		2		K-1956
10	17190	STRAP		8		K-1956
11	19423	CLAMP		5		K-1956
12	18210	NUT		2		K-1956
13	19422	ELBOW		4		K-1956
14	S-1404	OIL FILTER	17238	1		
15	17237	FILTER ELEMENT		1		S-1404

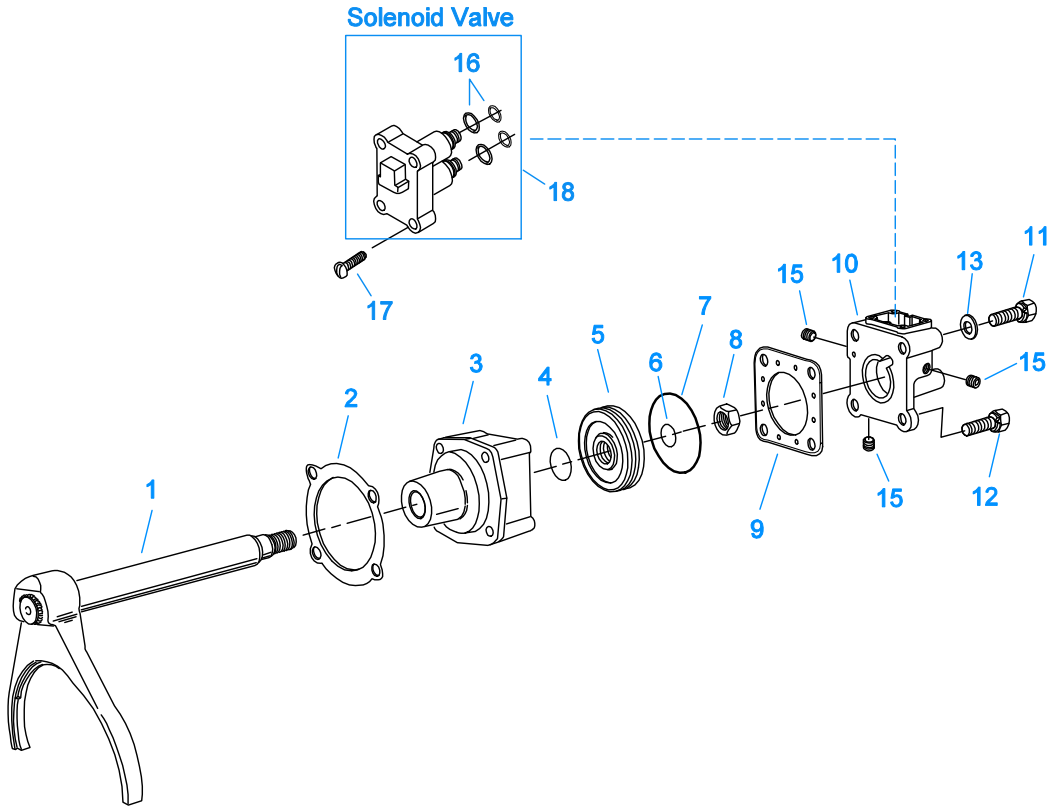

20539-03-01

RANGE CYLINDER

Item	Current Part	Description	Replaced Part	Qty.	Notes	Kits/Assys Where Needed
1	A-5474	SHIFT YOKE ASSY		1		
2	14347	GASKET		1		K-3484,K-3485
3	691348	RANGE CYLINDER		1		
4	14765	-O- RING		1		K-3484
5	14341	PISTON	23353	1		
6	14345	-O- RING		1		K-3484
7	14344	-O- RING		1		K-3484
8	X-1-1010	NUT		1	5/8"-18	
9	691955	GASKET	691440	1		K-3365,K-3484,K-3485
10	K-3365	RANGE CYL COVER KIT	691442	1		
11	X-8-647	CAPSCREW		2	3/8"-16X4-3/4"	
12	X-8L-605	CAPSCREW		2	3/8"-16X3"	
13	X-3-600	LOCKWASHER		2	3/8"	
15	X-12-208	PIPE PLUG		3	1/8" NPT	
16	K-2908	-O- RING KIT		1	FOR SOLENOID VALVE	
17	X-8-264	HEX FLANGE HEAD SCREW	X 8 259	4	#10-24 X 1 1/4	
18	K-3682	RANGE/SPLITTER VALVE KIT	5561801 ,5561804 ,K - 2907	1		

Group: REVERSE IDLER

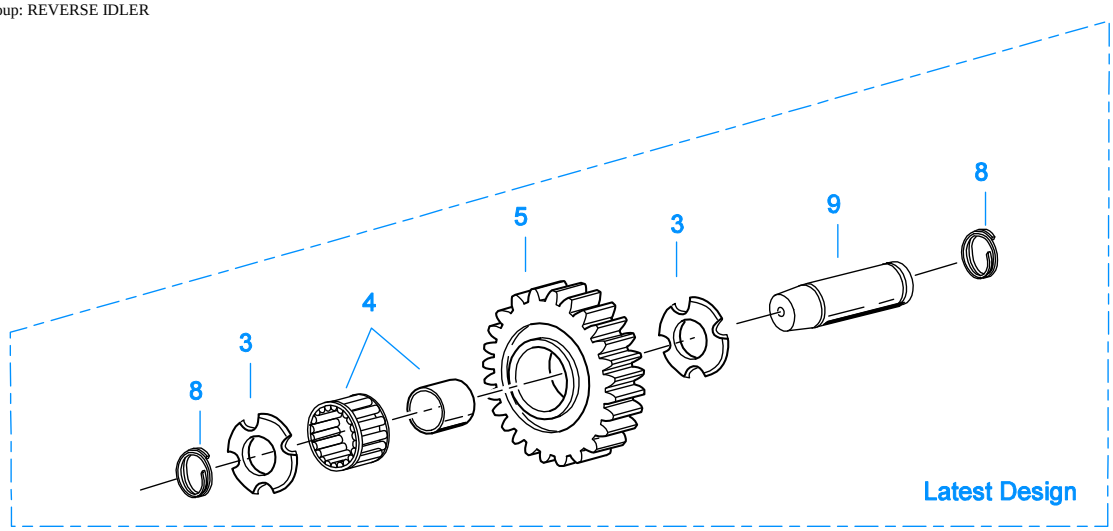

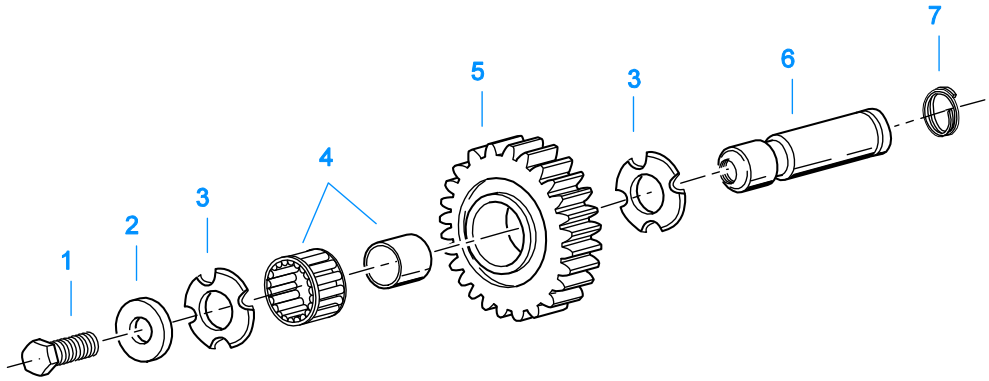

11382-3-97 RI

REVERSE IDLER

Item	Current Part	Description	Replaced Part	Qty.	Notes	Kits/Assys Where Needed
1	X-7-1008	CAPSCREW		2	5/8"-18X1-1/4	
2	14283	WASHER		2		
3	4302982	WASHER	14282	4		K-3209,S-2998
4	14287	BEARING	4305020	2		K-3486,K-3487
5	4301229	REVERSE IDLER GEAR		2		
6	K-3209	IDLER SHAFT REPL KIT	16405 ,4302981 ,4305513	2		
7	4303336	RETAINING RING		2		K-3209
8	4303336	RETAINING RING		4		K-3209
9	4305513	IDLER SHAFT		2		K-3209

Group: SHIFT BAR HOUSING

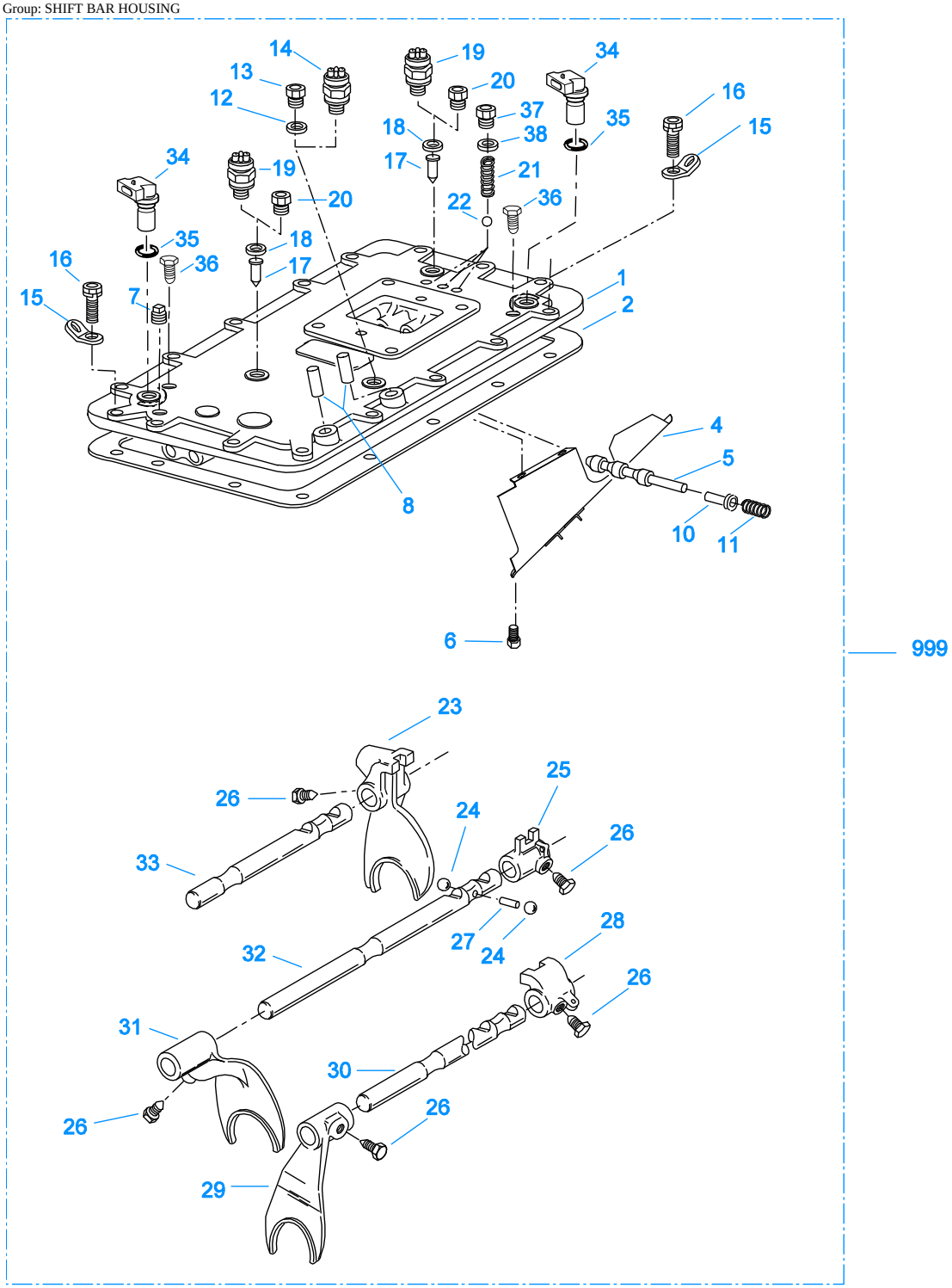

20235-03-01

SHIFT BAR HOUSING

Item	Current Part	Description	Replaced Part	Qty.	Notes	Kits/Assys Where Needed
1	S-2915	SHIFT BAR HOUSING ASSY	691532	1	HOUSING ONLY (DOES NOT INCLUDE SPEED SENSORS)	
2	4302676	GASKET	14918	1		K-3485,S-2905,S-2915
4	20070	OIL TROUGH		1		S-2905
5	20332	AIR VALVE SHAFT	17177	1		S-2905
6	X-8-423	CAPSCREW		2	1/4"-20X1/2"	

Item	Current Part	Description	Replaced Part	Qty.	Notes	Kits/Assys Where Needed
7	X-12-603	PIPE PLUG	X12 602	1	3/8" NPT	
8	4301378	DOWEL PIN		2		S-2905
10	21966	PLUNGER		1		
11	4301372	SPRING		1		
12	17179	GASKET		1		S-2905,S-2915
13	4303655	PLUG	17178	1		S-2905,S-2915
14	22941	NEUTRAL LIGHT SWITCH	12639	1	SWITCH NORMALLY CLOSED	
15	20815	LIFTING EYE	17105	2		
16	X-8L-602	CAPSCREW		2	3/8"-16X1-1/2"	
16	X-8L-604	CAPSCREW		16	3/8"-16X1-1/4"- OR USE 14 PCS OF X-8L-604 WITH 2 PCS OF X-8L-602	
17	15899	PIN		2		
18	15900	GASKET		2		S-2905,S-2915
19	22940	REVERSE LIGHT SWITCH	16830	1	SWITCH NORMALLY OPEN	
20	4303656	PLUG	15917	2		S-2905,S-2915
21	691661	COMPRESSION SPRING		3		S-2905
22	X-14-800	STEEL BALL		3	1/2"	
23	691712	SHIFT YOKE	4301376	1	REVERSE/1ST	S-2905
24	X-14-1200	STEEL BALL		2	3/4"	
25	14658	SHIFT BLOCK		1	2ND/3RD	S-2905
26	3220	LOCKSCREW		5		S-2905
27	1634	INTERLOCK PIN		1		S-2905
28	14659	SHIFT BLOCK		1	4TH/5TH	S-2905
29	691601	SHIFT YOKE	4302212	1	4TH/5TH	S-2905
30	4301366	YOKE BAR		1	4TH/5TH	S-2905
31	691600	SHIFT YOKE	4302994	1	2ND/3RD	S-2905
32	4301365	YOKE BAR		1	2ND/3RD	S-2905
33	4301364	YOKE BAR		1	REVERSE/1ST	S-2905
34	K-3231	SPEED SENSOR KIT	A - 6398 ,A - 6724	2	SINGLE PICK-UP (2 PIN)	
35	14142	-O- RING		2		S-1992,S-2905
36	X-8C-409	CAPSCREW		2	1/4"-20X5/8"	
37	4303656	PLUG	15917	3		S-2905,S-2915
38	15900	GASKET		3		S-2905,S-2915
999	S-2905	SHIFT BAR HOUSING ASSY	691532	1	COMPLETE	

Group: SHIFT CONTROLS

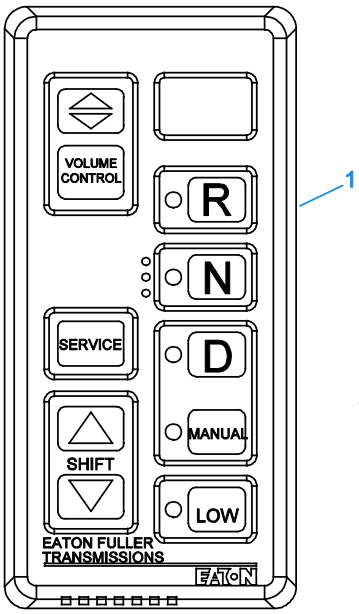

PUSHBUTONASSEMBLY

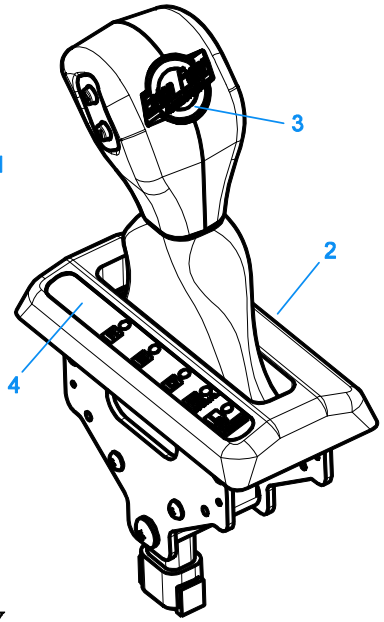

COBRA LEVER - only for use with 10MY559M Mack Swing Arm Bracket

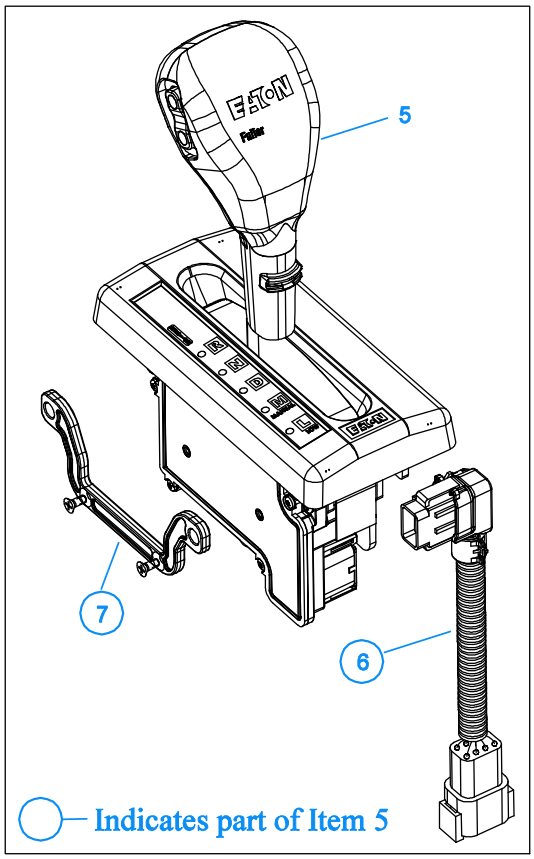

COBRA LEVER - Latest Design - for all applications with the exception of units using the 10MY559M Mack Swing Arm Bracket (see illustration to the left)

10209-06-09

SHIFT CONTROLS

Item	Current Part	Description	Replaced Part	Qty.	Notes	Kits/Assys Where Needed
1	S-2989	PUSHBUTTON ASSEMBLY	S - 2985	1		
1	S-2990	PUSHBUTTON ASSEMBLY		1	FOR USE WITH REMOTE LEVER	
2	K-3997	COBRA SHIFT LEVER KIT (RHO) W/MACK SWING ARM	4305447,K-3680	1	(LEFT HAND DRIVE), ALSO KNOWN AS (RHO) RIGHT HAND OPERATION - FOR UNITS USING THE MACK 10MY559M SWING ARM BRACKET	
3	5505111	SHIFT LEVER KNOB DECAL		1		
4	5505110	SHIFT LEVER POSITION STRIP		1		
5	K-3980	COBRA SHIFT LEVER KIT (RHO)	K-3680	1	(LEFT HAND DRIVE), ALSO KNOWN AS (RHO) RIGHT HAND OPERATION	
6	A-7982	JUMPER HARNESS ASSY		1		
7	K-3979	SPACER KIT		1	INCLUDES (4) SPACER MOUNTING SCREWS	

Group: X-Y SHIFTER MODULE

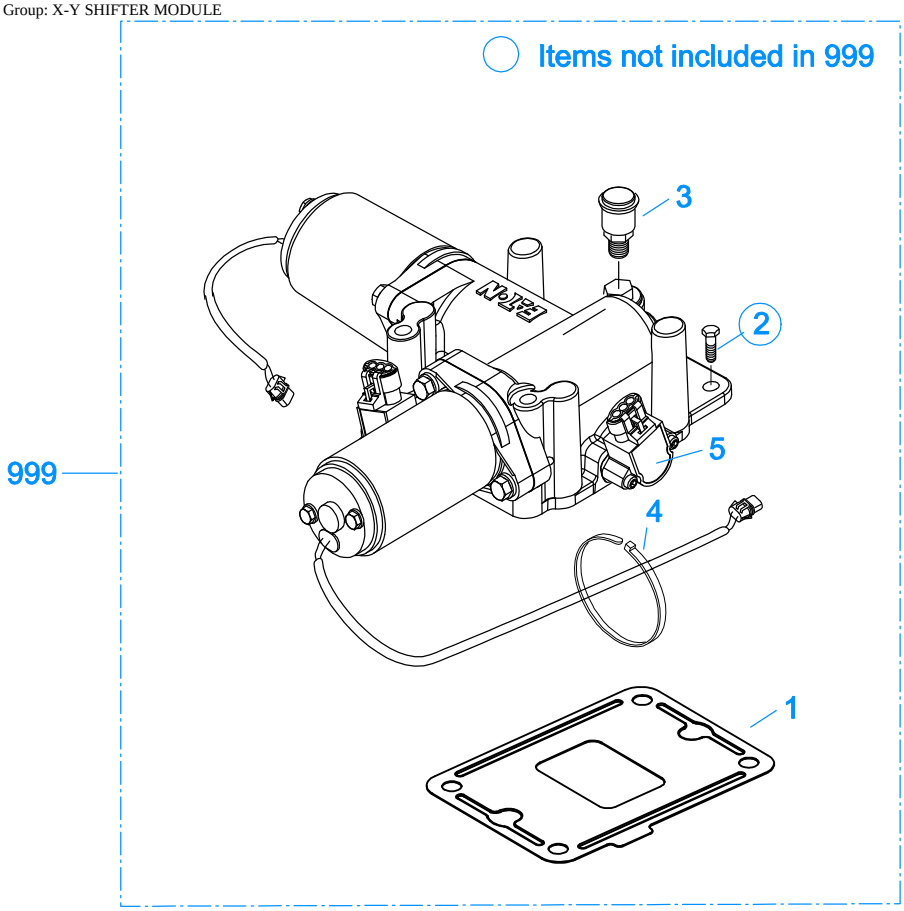

6	XY Shifter Repair Kit

20229-03-01

X-Y SHIFTER MODULE

Item	Current Part	Description	Replaced Part	Qty.	Notes	Kits/Assys Where Needed
1	4305452	GASKET	4301958	1		K-3436,K-4009
2	X-8C-615	CAPSCREW		4		
3	4304602	BREATHER	23605	1	1/4" NPT	
4	5559348	TY-RAP		2		K-3682,K-4118
5	K-3438	POSITION SENSOR KIT	691551 ,691926	2		
6	K-4009	XY SHIFTER REPAIR KIT		1		
999	K-3436	XY SHIFTER KIT	691381 ,A - 7034	1		