Roadranger® More time on the road®

# Illustrated Parts List

**FRF-11210B**
**July 2011**

# For parts or service call us
# Pro Gear & Transmission, Inc.


**1 (877) 776-4600**

**(407) 872-1901**

**parts@eprogear.com**

**906 W. Gore St.**

**Orlando, FL 32805**

# Contents

**How To Use The Illustrated Parts List** ..... **3**
**AIR MODULE & RANGE CYL.** ..... **4**
**AUXILIARY DRIVE GEAR** ..... **6**
**CASE (AUX)** ..... **7**
**CASE (FRONT)** ..... **9**
**COUNTERSHAFT & BRGS(AUX)** ..... **11**
**COUNTERSHAFT ASSY** ..... **12**
**INPUT SHAFT & DRIVE GEAR** ..... **13**
**INTEGRAL OIL COOLER** ..... **14**
**INTEGRAL OIL PUMP** ..... **15**
**ISOLATORS** ..... **16**
**KITS & ASSEMBLIES** ..... **17**
**LEVERS/HOUSINGS** ..... **19**
**MAINSHAFT & SYNCHRO(AUX)** ..... **21**
**MAINSHAFT ASSY** ..... **23**
**MISC. THRU-SHAFT PTO** ..... **25**
REAR HOUSING ASSY ..... 25
**MISCELLANEOUS** ..... **26**
**OIL COOLER** ..... **27**
**REVERSE IDLER** ..... **28**
**ROADRANGER VALVE** ..... **29**
**SHIFT BAR HOUSING (FRF)** ..... **32**

## How To Use The Illustrated Parts List

The information contained in this document is subject to frequent updates. Therefore, for the latest information available, please visit the interactive Electronic Parts Catalog at www.roadranger.com/epc.

### Model Designation or Nomenclature

- For information regarding Model Designation and Nomenclature, visit www.roadranger.com.

### Kits and Assemblies (K/A's)

- Kits and Assemblies contain groups of individual or assembled parts developed for optimal replacement or repair of a service problem.
- Kits and Assemblies are shown with applicable parts groupings in the parts listings.

### Identifying Kits and Assemblies

A- Part numbers beginning with the letter 'A' are pre-assembled Production Assemblies
K- Part numbers beginning with the letter 'K' are kits that are not assembled
S- Part numbers beginning with the letter 'S' are pre-assembled Service Assemblies

- Note: Some Production Assemblies do not begin with a letter prefix (Midrange only).

### Illustrations

- Illustrations show parts in assembly groups.
- Item numbers on illustrations correspond with parts listings on pages adjacent to the illustration.
- Notes are included on illustrations where additional information is needed.

### Parts Listing

Parts listings are defined by parts groupings and are broken down by service assemblies. Parts listings identify a part for servicing with the following categories

- **Item Number** - corresponding with numbers on illlustrations for part identification.
- **Current Part** - indentifies part as it is available for service.
- **Description** - specifies part name or description.
- **Replaced Part** - quantity quantity required for assembly.
- **Quantity** - defines unique characteristics or requirements.
- **Notes** - indicates Kits or Assemblies that contain a particular part.
- **Kits/Assy's Where Used**

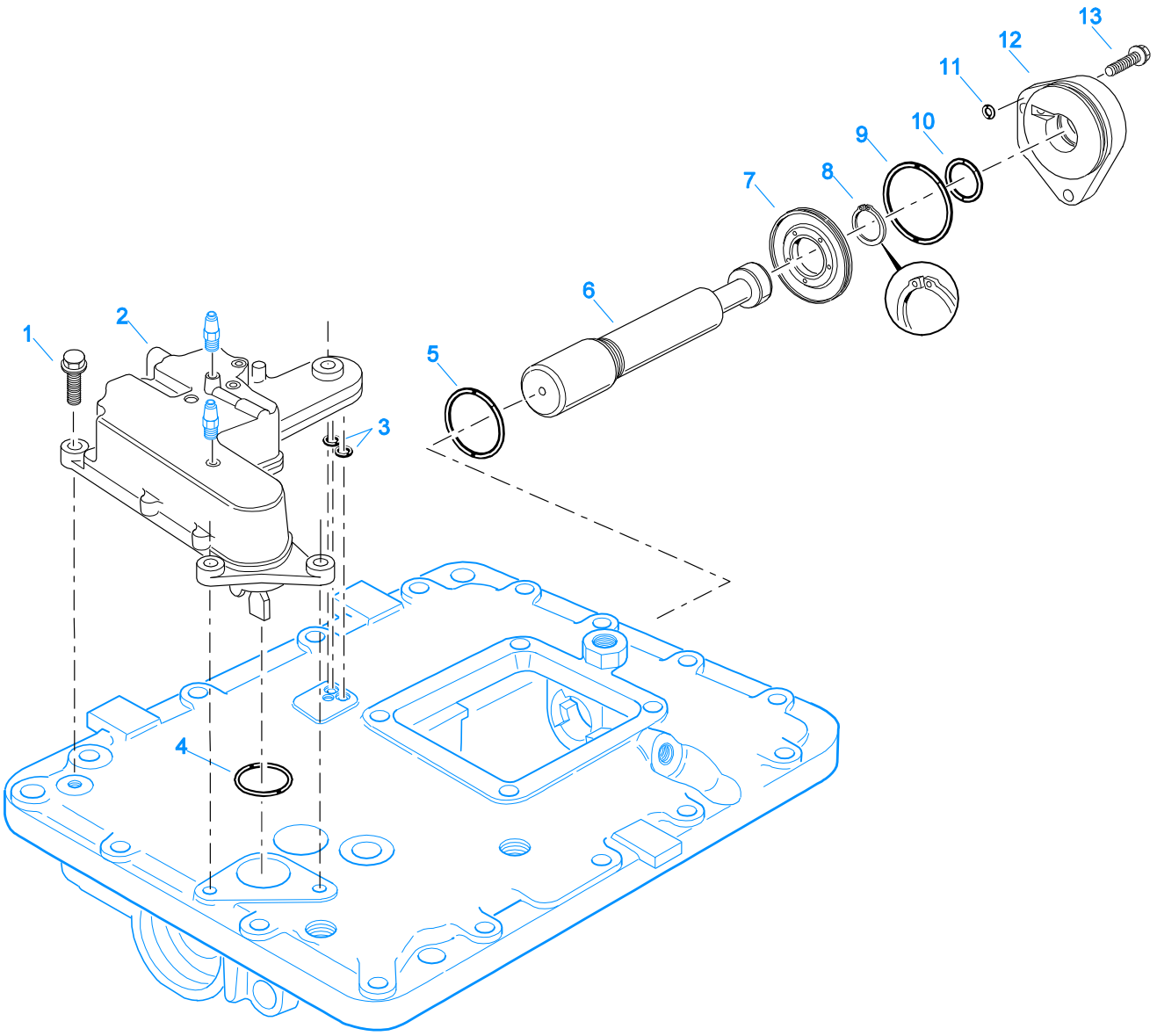


10136-9-94

## AIR MODULE & RANGE CYL.

| Item | Current Part | Description | Replaced Part | Qty. | Notes | Kits/Assys Where Needed |
|---|---|---|---|---|---|---|
| 1 | X-8-0804M | CAPSCREW | | 4 | M8 X 1.25 X 30MM | |
| 2 | K-3245 | AIR MODULE ASSY | A - 6342 | 1 | | |
| 3 | 14197 | -O- RING | | 2 | | K-2923,K-3245,S-2701,S-2702 |
| 4 | 15569 | -O- RING | | 1 | | K-3245,S-2701,S-2702 |
| 5 | 20423 | -O- RING | | 1 | | K-2923,S-2701,S-2702 |
| 6 | K-3129 | BAR & RING KIT | 4302918 | 1 | | |
| 7 | K-3128 | PISTON KIT | 4302177 | 1 | | |
| 8 | 4302080 | SNAP RING | | 1 | | K-2923,K-3128,K-3129,K-3130,K-3131,K-3239 |
| 9 | 5568507 | -O- RING | | 1 | | K-2923,S-2701,S-2702 |
| 10 | 14765 | -O- RING | | 1 | | K-2923,S-2701,S-2702 |
| 11 | 14197 | -O- RING | | 1 | | K-2923,K-3245,S-2701,S-2702 |
| 12 | 4302140 | COVER | | 1 | | S-2701,S-2702 |
| 13 | X-8-0804M | CAPSCREW | | 2 | M8 X 1.25 X 30MM | |

Group: AUXILIARY DRIVE GEAR

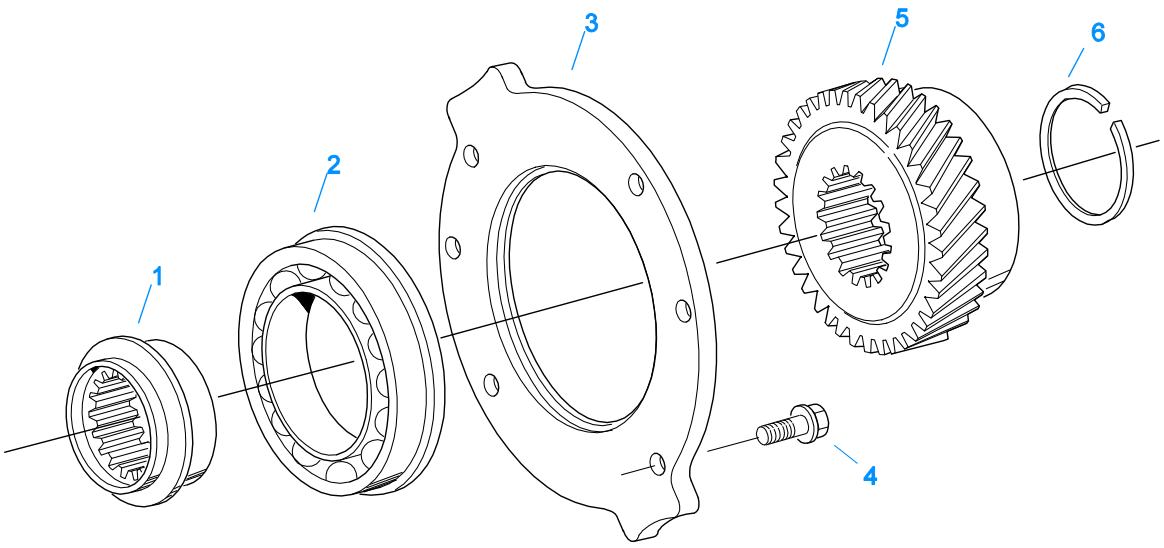


10486-9-94 C2

## AUXILIARY DRIVE GEAR

| Item | Current Part | Description | Replaced Part | Qty. | Notes | Kits/Assys Where Needed |
|---|---|---|---|---|---|---|
| 1 | 4302313 | BEARING SPACER | | 1 | | |
| 2 | 5566507-BOX | BEARING | 5566504,5566507 | 1 | | K-2924,K-3132 |
| 3 | 4302257 | RETAINER | | 1 | | |
| 4 | X-8-1003M | CAPSCREW | | 6 | M10 X 1.5 X 25MM | |
| 5 | 4302435 | AUXILIARY DRIVE GEAR | 4302434 | 1 | | |
| 6 | 17399 | SNAP RING | | 1 | | K-2917,K-2924,K-3132 |

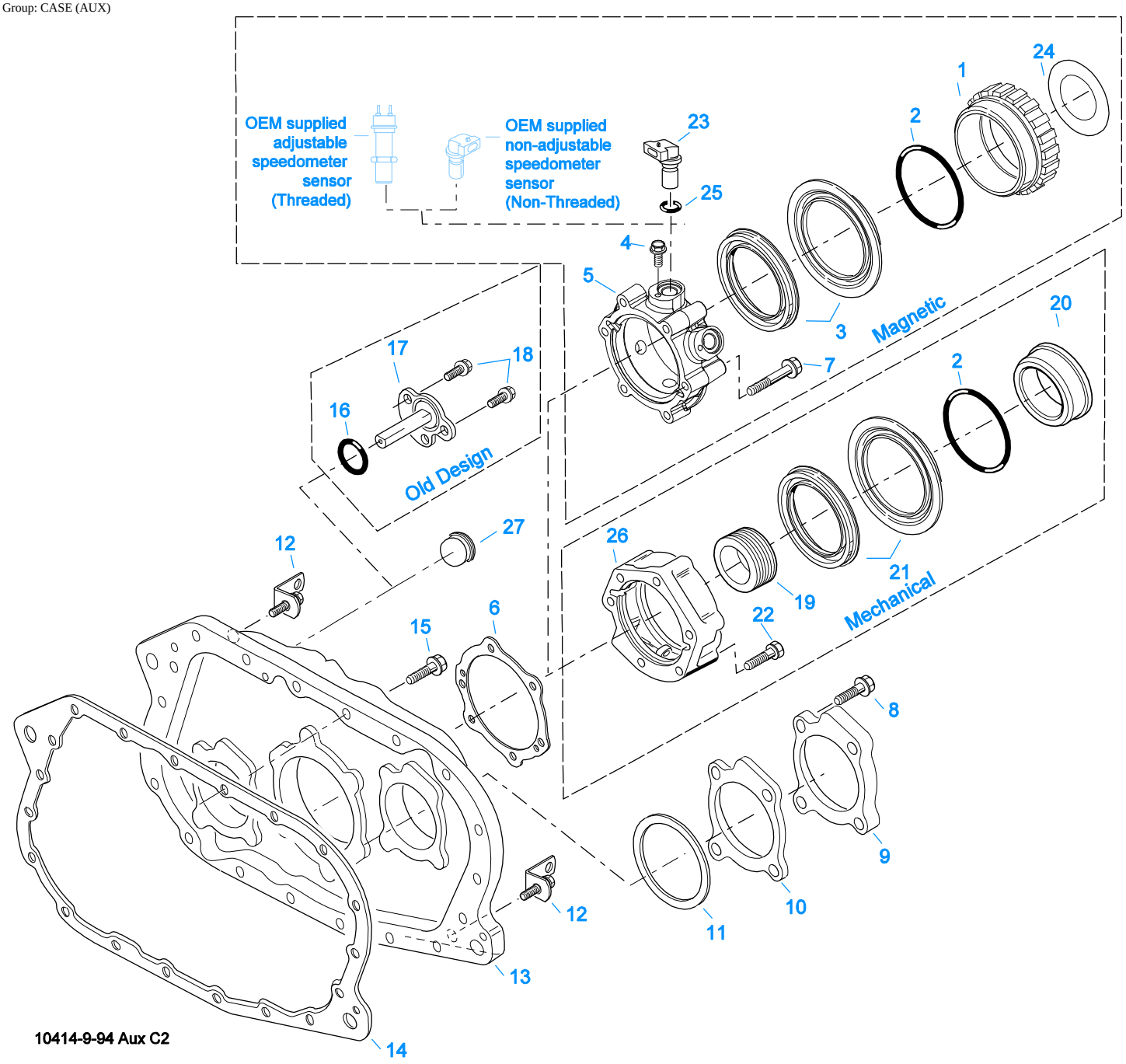


## CASE (AUX)

| Item | Current Part | Description | Replaced Part | Qty. | Notes | Kits/Assys Where Needed |
|---|---|---|---|---|---|---|
| 1 | S-2501 | SPEEDO ROTOR ASSY | 4302242 | 1 | MAGNETIC | |
| 2 | 5568511 | -O- RING | | 1 | | K-2918,S-2501,S-2503,S-2809 |
| 3 | K-2918 | OIL SEAL KIT | 4302322 4302323 | 1 | "FOR MAGNETIC COVER" | K-2924 |
| 4 | X-8-0801M | CAPSCREW | | 2 | M8 X 1.25 X 12MM | |
| 5 | S-2809 | REAR BEARING COVER ASSY | 4302332 ,4303872 ,4304652 ,4305830 | 1 | PUSH-IN/THREAD-IN MAGNETIC PICK-UP | |
| 6 | 1009551 | GASKET - RED EDGE MOLDED | | 1 | RED EDGE MOLDED GASKET - UNCOMPRESSED THICKNESS .043 - .051 - NOT INTERCHANGEABLE WITH ANY OTHER GASKET | K-2262,K-2918,K-2921,S-2502,S-2809,S-2859 |
| 6 | 4302247 | GASKET - PURPLE EDGE MOLDED | | 1 | NON EDGE MOLDED GASKET - UNCOMPRESSED THICKNESS - .013 | K-2262,K-2918,K-2921 |

| Item | Current Part | Description | Replaced Part | Qty. | Notes | Kits/Assys Where Needed |
|---|---|---|---|---|---|---|
| | | | | | - .018 - NOT INTERCHANGABLE WITH ANY OTHER GASKET | |
| 7 | X-8-1008M | HEX SCREW | X 8C 1024M | 4 | M10 X 80.0MM | |
| 7 | X-8-1009M | CAPSCREW | | 6 | M10 X 1.5 X 50MM USE W/4303872 AND 4302332 RBC | |
| 7 | X-8-1009M | CAPSCREW | | 2 | M10 X 1.5 X 50MM | |
| 8 | X-8-1003M | CAPSCREW | | 8 | M10 X 1.5 X 25MM | |
| 9 | 4302320 | COVER | 21346 | 2 | | S-2747 |
| 10 | 4305978 | GASKET | 4302246 | 2 | | K-2921,K-3475,K-3476,S-2747 |
| 11 | K-2805 | SHIM KIT | 21452 K - 2106 | 1 | | K-2924,K-3132,S-2747 |
| 12 | K-3517 | LIFTING EYE KIT | A - 6409 | 2 | | |
| 13 | K-3239 | REAR HSG REPL KIT | 4302274 | 1 | | |
| 13 | S-2691 | REAR HOUSING ASSY | 4303750 | 1 | | K-3239 |
| 14 | 4302248 | GASKET | | 1 | | K-2921,K-3883,S-2747 |
| 15 | X-8C-1036M | CAPSCREW | X-8-1005M | 17 | M10 X 1.5 X 38MM | K-3883 |
| 15 | X-8C-1037M | CAPSCREW | X-8-1006M | 2 | M10 X 1.5 X 49MM | K-3883 |
| 16 | 15569 | -O- RING | | 1 | | K-3245,S-2701,S-2702 |
| 17 | A-6715 | RANGE BAR COVER ASSY | A - 6472 | 1 | | |
| 18 | X-8-0802M | SCREW | | 2 | M8 X 1.25 X 20MM | |
| 19 | 86104 | SPEEDO DRIVE GEAR | | 1 | | |
| 20 | S-2503 | SPEEDO SPACER ASSY | 4302590 | 1 | MECHANICAL | |
| 21 | K-2262 | OIL SEAL W/SLINGER | 19109 20807 ,20808 | 1 | "FOR MECHANICAL COVER" | K-3132 |
| 22 | X-8-1007M | SCREW | | 6 | M10 X 1.5 X 75MM | |
| 23 | K-3454 | SPEED SENSOR KIT | A - 6398 ,A - 6724 | 1 | SINGLE PICK-UP (2 PIN) | |
| 23 | K-3455 | SPEED SENSOR KIT, DUAL | A - 7046 ,A - 7518 | 1 | DUAL PICK-UP (4 PIN) | |
| 24 | 4304653 | SHIELD | | 1 | | S-2809 |
| 25 | 14142 | -O- RING | | 1 | | |
| 26 | S-2502 | REAR BRG COVER ASSY | 4303604 ,4305827 | 1 | MECHANICAL - 4:00 OPENING | |
| 26 | S-2859 | REAR BRG COVER ASSY | 4302732 ,4305826 | 1 | MECHANICAL - 6:00 OPENING | |
| 27 | K-3507 | PLUG RETAINING KIT | 4303832 ,4305218 ,4305219 | 1 | | |

Group: CASE (FRONT)

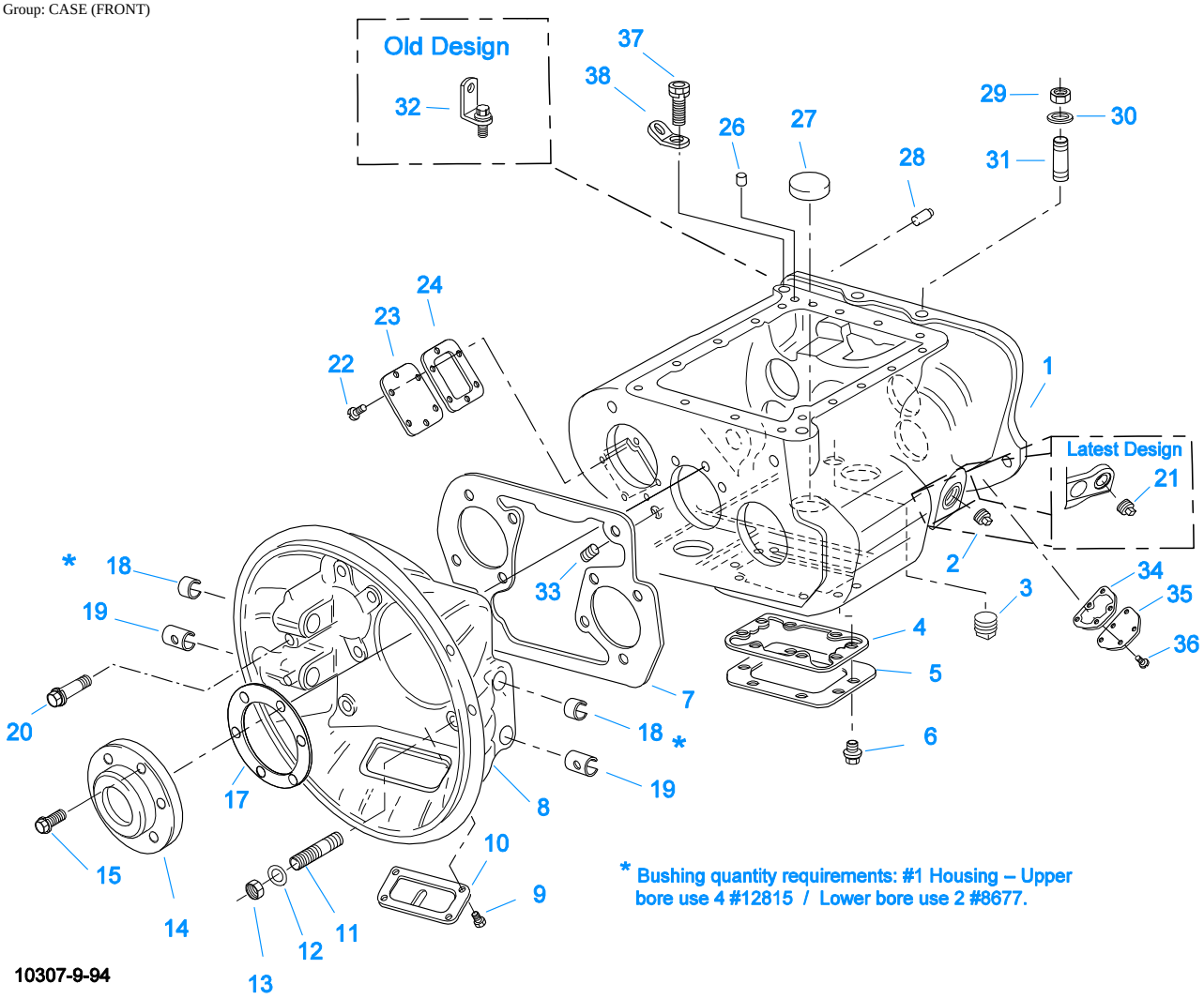


## CASE (FRONT)

| Item | Current Part | Description | Replaced Part | Qty. | Notes | Kits/Assys Where Needed |
|---|---|---|---|---|---|---|
| 1 | S-2347 | CASE ASSY | 4302071 | 1 | OPTIONAL - FOR USE W/INTEGRAL OIL PUMP | |
| 1 | S-2348 | CASE ASSY | 4302645 | 1 | STANDARD | |
| 1 | S-2706 | CASE ASSY | 4303707 | 1 | OPTIONAL - FOR USE W/INTEGRAL OIL COOLER | |
| 2 | X-12-2007 | PIPE PLUG | X12 2006 | 1 | | |
| 3 | X-12-1207 | PIPE PLUG | X12 1202 ,X12 1206 | 1 | 3/4" MAGNETIC | |
| 4 | 4305310 | GASKET | 4302810 | 1 | | K-2921 |
| 5 | 4302809 | PTO COVER | 16596 ,4300571 | 1 | | |
| 6 | X-8-1200M | CAPSCREW | | 8 | M12 X 1.75 X 20MM | |
| 7 | 4306584 | GASKET | 4302314 | 1 | | K-2921,K-4054 |
| 8 | A-3713 | CLUTCH HOUSING ASSY | A - 3700 | 1 | #1 PUSH-PULL IRON | |
| 8 | A-3723 | CLUTCH HOUSING ASSY | A - 3721 ,A - 3722 | 1 | #2 PUSH-PULL IRON | |
| 8 | A-4772 | CLUTCH HOUSING ASSY | A - 4344 ,A - 4771 | 1 | #2 PUSH-PULL ALUM. | |
| 8 | A-5992 | CLUTCH HOUSING ASSY | 4301103 | 1 | #1 PULL ALUMINUM FOR MODELS ABOVE 1250 LBS. FT. | |
| 8 | A-6064 | CLUTCH HOUSING ASSY | A - 4342 ,A - 4770 ,A - 6062 ,A - 6063 ,A - 6065 | 1 | #1 PULL ALUMINUM FOR MODELS BELOW 1250 LBS. FT. | |
| 9 | 239614 | SCREW | X-8L-509 | 4 | 5/16-18X.81 QUANTITY DEPENDENT ON DESIGN | |
| 10 | 4305230 | HAND HOLE COVER | 11453 | 1 | #1 PULL | |
| 11 | 5577509 | STUD | 5577505,5577503 | 6 | M16 X 60MM | |
| 12 | X-10-1005 | WASHER | | 6 | | K-4054 |
| 13 | X-1-1606M | SELF LOCKING HEX NUT | X 1 1601M ,X 1 1603M,X-1-1605M | 6 | M16 X 1.5 | K-4054 |

| Item | Current Part | Description | Replaced Part | Qty. | Notes | Kits/Assys Where Needed |
|---|---|---|---|---|---|---|
| 14 | 20550 | FRONT BRG COVER | | 1 | 2" PULL | K-3600,K-3602,K-4124 |
| 15 | X-8-1004M | CAPSCREW | | 6 | M10 X 1.5 X 30MM | |
| 17 | 14311 | GASKET | | 1 | | K-2921 |
| 18 | 12815 | BUSHING | | 4 | UPPER | A-3713,A-3723,A-4772,A-5992,A-6064,K-3600,K-3602 |
| 19 | 8677 | BUSHING | | 2 | LOWER | A-3713,A-3723,A-4772,A-6064 |
| 20 | X-8C-1209M | SCREW, HEX HD/WASHER ASSY | X-8C-1204M | 4 | M12X1.75, USE 2 PCS FOR IRON HOUSING, USE 4 PCS FOR ALUMINUM HOUSING | K-4054 |
| 20 | X-8C-1210M | SCREW, HEX HD/WASHER ASSY | X-8C-1203M | 2 | M12X1.75, FOR IRON HOUSING | K-4054 |
| 21 | 4304023 | PLUG | 4303747 | 1 | 1-1/16" MAGNETIC, O-RING INCLUDED | S-2347,S-2348,S-2707,S-2738 |
| 22 | X-8-1002M | CAPSCREW | | 6 | M10 X 1.5 X 20MM | |
| 23 | 14575 | PTO COVER | 4302254 | 1 | | |
| 24 | 4305309 | GASKET | 1684 | 1 | | K-2921 |
| 26 | 5575503 | DOWEL PIN | | 2 | | S-2347,S-2348,S-2706 |
| 27 | 14373 | MAGNET | | 3 | | S-2347,S-2348,S-2706,S-2707,S-2738 |
| 28 | 18128 | PIN | | 2 | | |
| 29 | X-1-1606M | SELF LOCKING HEX NUT | X 1 1601M ,X 1 1603M,X-1-1605M | 2 | M16 X 1.5 | K-4054 |
| 30 | X-10-1005 | WASHER | | 2 | | K-4054 |
| 31 | 5577504 | STUD | | 2 | M16 X 2 X 52MM | |
| 32 | K-3517 | LIFTING EYE KIT | A - 6409 | 2 | | |
| 33 | X-12-802 | PIPE PLUG | X12 800 | 1 | 1/2" | |
| 34 | 4302864 | GASKET | | 1 | FOR USE W/INTEGRAL OIL PUMP | K-2910,K-2921 |
| 35 | 4302854 | COVER | | 1 | FOR USE W/INTEGRAL OIL PUMP | |
| 36 | X-8-0603M | CAPSCREW | | 5 | FOR USE W/INTEGRAL OIL PUMP | |
| 37 | 20815 | LIFTING EYE | 17105 | 2 | | K-3517,S-2347,S-2348,S-2691,S-2692,S-2706 |
| 38 | X-8-1003M | CAPSCREW | | 2 | M10 X 1.5 X 25MM | |

Group: COUNTERSHAFT & BRGS(AUX)

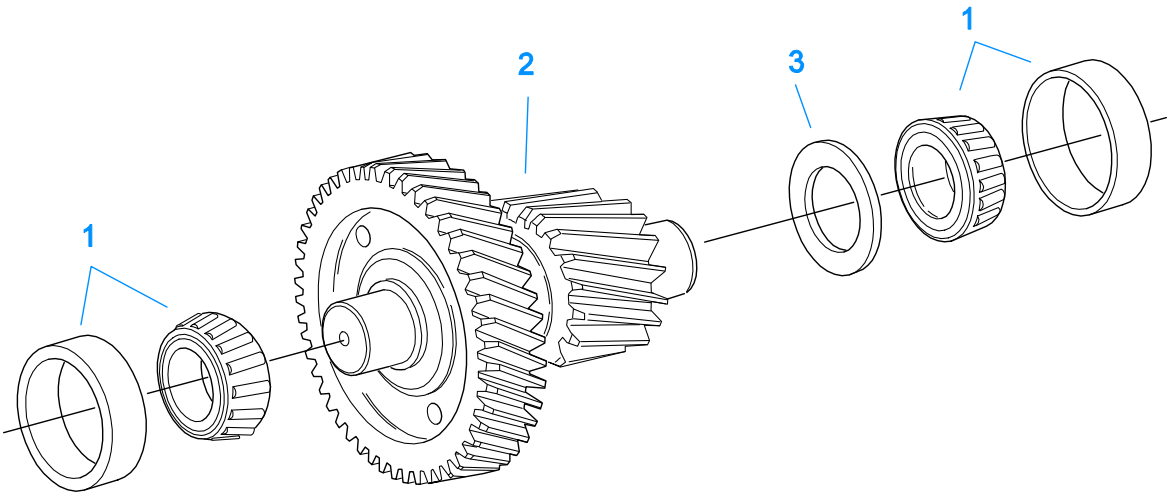


10440-1/92 Aux CS Helical

## COUNTERSHAFT & BRGS(AUX)

| Item | Current Part | Description | Replaced Part | Qty. | Notes | Kits/Assys Where Needed |
|---|---|---|---|---|---|---|
| 1 | 4302074-BOX | BEARING | 21343,4302074 | 4 | | K-2924,K-3132 |
| 2 | A-6434 | WELDED COUNTERSHAFT ASSY | A - 6433 ,A - 6552 | 2 | D/G 23160 - C/S 4302412 | |
| 3 | 21342 | SPACER | 22903 | 2 | | |

Group: COUNTERSHAFT ASSY

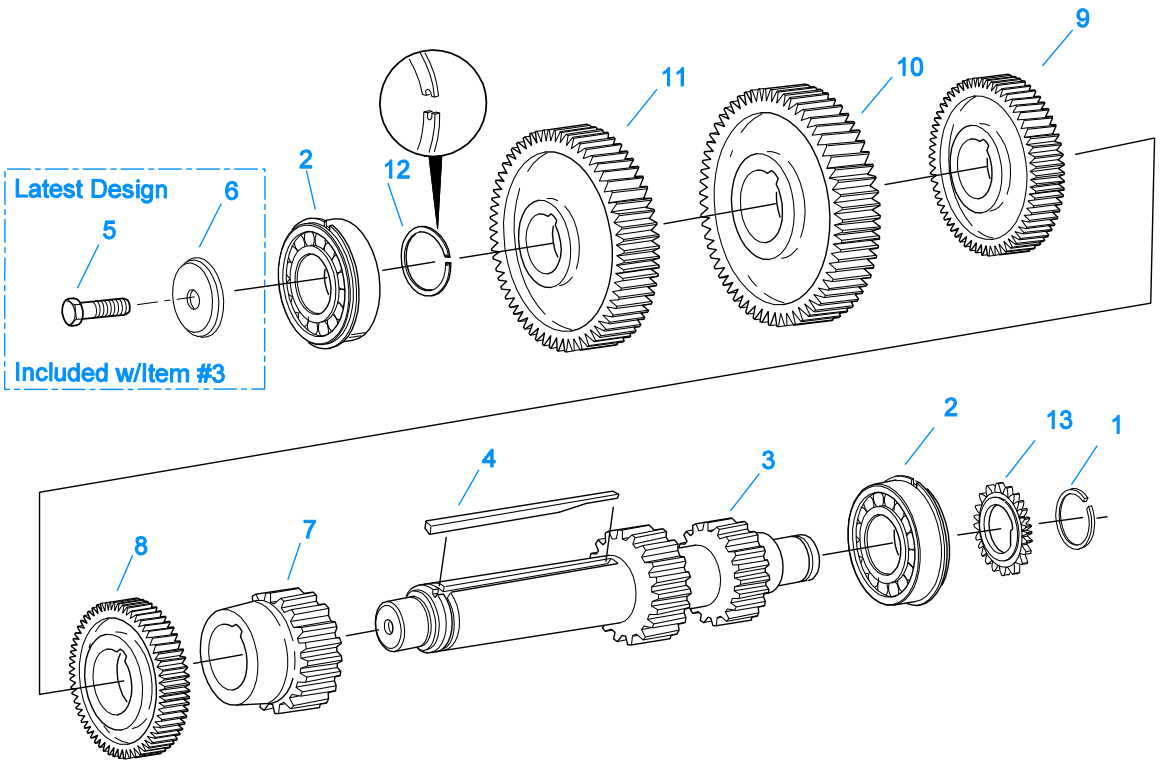


## COUNTERSHAFT ASSY

| Item | Current Part | Description | Replaced Part | Qty. | Notes | Kits/Assys Where Needed |
|---|---|---|---|---|---|---|
| 1 | 4302082 | SNAP RING | | 2 | | K-2924,K-3132 |
| 2 | 4304080 | BEARING | 4302240 | 4 | | K-2924,K-3132 |
| 3 | K-3267 | CNTRSHFT KIT-W/REV & 1ST | 4303739 ,4304493 | 2 | STANDARD | |
| 3 | K-3268 | CNTRSHFT KIT-W/REV & 1ST | 4303740 ,4304554 | 1 | LOWER W/PUMP | |
| 3 | K-3269 | CNTRSHFT KIT-W/REV & 1ST | 4303758 ,4304552, 4303950 | 2 | LOWER & UPPER W/THRU SHAFT PTO | |
| 3 | K-3270 | CNTRSHFT KIT-W/REV & 1ST | 4303759 ,4304553, 4303951 | 1 | LOWER W/PUMP & W/PTO | |
| 4 | 4302317 | KEY | | 2 | | |
| 5 | X-7-1005 | CAPSCREW | | 2 | INCLUDED WITH ITEM #3 | |
| 6 | 4304024 | BEARING RETAINER | | 2 | INCLUDED WITH ITEM #3 | K-3267,K-3268,K-3269,K-3270 |
| 7 | 4302420 | 2ND GEAR-CNTRSHFT | 4302404 ,4302530 | 2 | | |
| 8 | 4304491 | 3RD GEAR-CNTRSHFT | 4302402 | 2 | | |
| 9 | 4303737 | 4TH GEAR-CNTRSHFT | 4303010 | 2 | | |
| 10 | 15953 | PTO GEAR - LOWER | | 1 | | |
| 10 | 20840 | PTO GEAR - UPPER | 15952 | 1 | | |
| 11 | 4302271 | DRIVE GEAR-CNTRSHFT | 4302414 ,4304490 | 2 | | |
| 12 | 4302081 | SNAP RING | | 2 | | |
| 13 | 4302792 | PUMP DRIVE GEAR | | 1 | FOR MODELS WITH PUMP | |

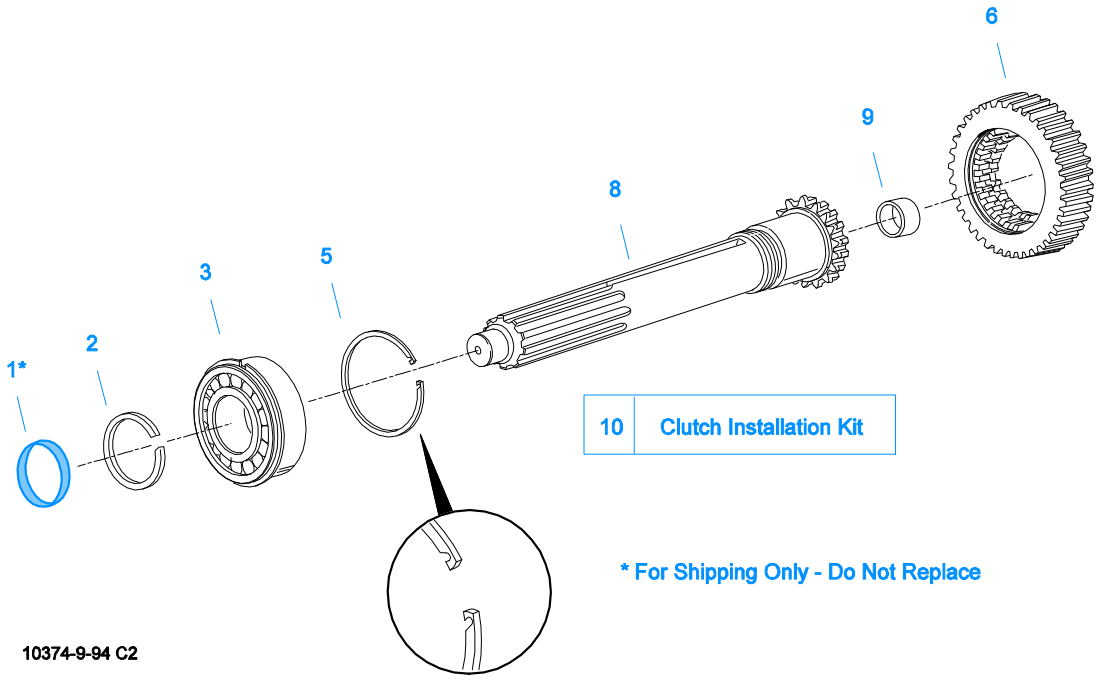


## INPUT SHAFT & DRIVE GEAR

| Item | Current Part | Description | Replaced Part | Qty. | Notes | Kits/Assys Where Needed |
|---|---|---|---|---|---|---|
| 1 | 23559 | SHIPPING SEAL | | 1 | NOT SOLD FOR SERVICE | |
| 2 | 16980 | SNAP RING | | 1 | | K-2917,K-3600,K-3602,K-4124 |
| 3 | 4301417 | BEARING | 81504 | 1 | | K-2924,K-3132,K-3600,K-3602,K-4124 |
| 5 | 4302486 | SNAP RING | | 1 | USE W/4303999 MAIN DRIVE GEAR | K-2917,K-3602 |
| 5 | 4303362 | SNAP RING | | 1 | USE W/4304635 MAIN DRIVE GEAR | K-2917,K-2924,K-3132,K-3416,K-3600,K-4124 |
| 6 | 4302264 | NLA-ORDER K-3416 | | 1 | | |
| 6 | 4302428 | NLA-ORDER K-3416 | | 1 | | |
| 6 | 4303999 | NLA-ORDER K-3416 | 4303998 | 1 | | |
| 6 | 4305873 | MAIN DRIVE GEAR | 4304634,4304635 | 1 | USE W/4303362 SNAP RING AND S-2822 INPUT SHAFT | K-3416 |
| 8 | K-3602 | CLUTCH INSTALLTION KIT | 4302315 ,S - 2988 | 1 | FOR 4302315 INPUT SHAFT REPLACEMENT | |
| 8 | S-2395 | NLA-ORDER K-3416 | 4302315 | 1 | | |
| 8 | S-2822 | INPUT SHAFT ASSY | 4304633 | 1 | 2" PULL - USE W/4304635 MAIN DRIVE GEAR | K-3416,K-3600,K-4124 |
| 9 | 16566 | BUSHING | | 1 | | K-2924,K-3132,S-2395,S-2822 |
| 10 | K-3600 | CLUTCH INSTALLTION KIT | | 1 | FOR CURRENT DESIGN INPUT SHAFT (S-2822) | |
| 10 | K-3602 | CLUTCH INSTALLTION KIT | 4302315 ,S - 2988 | 1 | FOR ORIGINAL DESIGN INPUT SHAFT (4302315) | |
| 10 | K-4124 | CLUTCH INSTALLATION KIT (FR), HYDRAULIC RELEASE | | 1 | STANDARD FR INPUT SHAFT AND YOKE FOR HYDRAULIC CLUTCH RELEASE | |

Group: INTEGRAL OIL COOLER

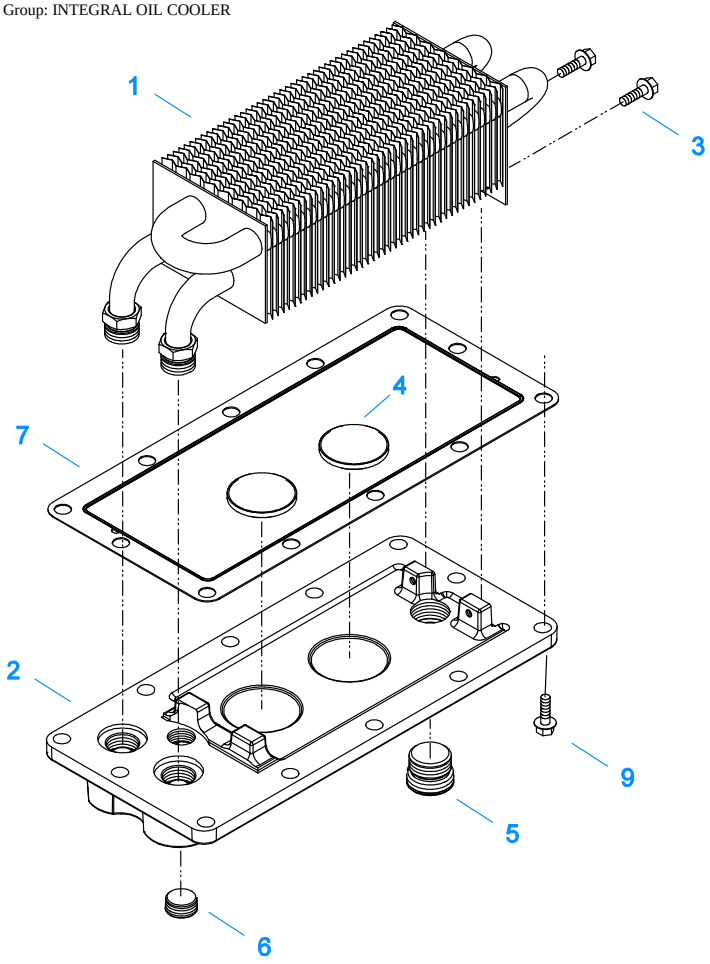


10535-5-99

## INTEGRAL OIL COOLER

| Item | Current Part | Description | Replaced Part | Qty. | Notes | Kits/Assys Where Needed |
|---|---|---|---|---|---|---|
| 1 | K-3246 | INTEGRAL OIL COOLER KIT | | 1 | | |
| 2 | S-2707 | OIL COOLER COVER ASSY | 4303709 | 1 | OPTIONAL - 1/2-14 NPTF | |
| 2 | S-2738 | OIL COOLER COVER ASSY | 4303993 | 1 | STANDARD - 3/4-16 UNF 2B | |
| 3 | X-8-0603M | CAPSCREW | | 2 | M6 X 1 X 20MM | |
| 4 | 14373 | MAGNET | | 2 | | S-2347,S-2348,S-2706,S-2707,S-2738 |
| 5 | 4304023 | PLUG | 4303747 | 1 | 1-1/16" MAGNETIC, O-RING INCLUDED | S-2347,S-2348,S-2707,S-2738 |
| 6 | X-12-802 | PIPE PLUG | X12 800 | 1 | 1/2" | |
| 7 | 4303742 | GASKET | | 1 | | S-2707,S-2738 |
| 9 | X-8-1004M | CAPSCREW | | 12 | M10 X 1.5 X 30MM | |

Group: INTEGRAL OIL PUMP

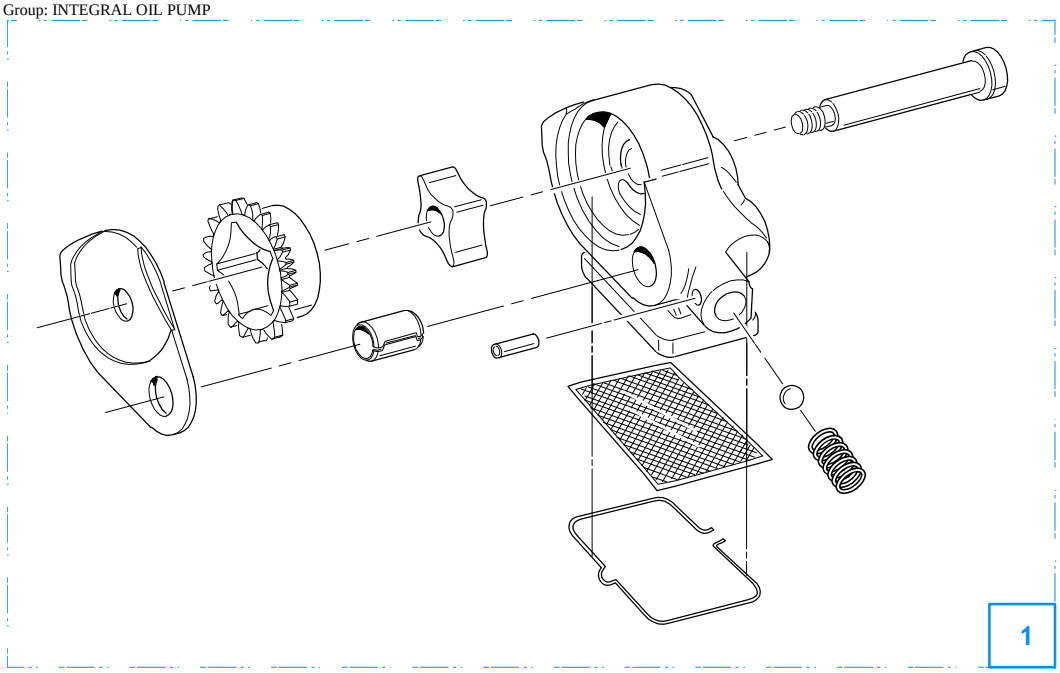


10522-9-94 C2

## INTEGRAL OIL PUMP

| Item | Current Part | Description | Replaced Part | Qty. | Notes | Kits/Assys Where Needed |
|---|---|---|---|---|---|---|
| 1 | A-6473 | INTEGRAL OIL PUMP | | 1 | COMPONENT PARTS NOT SOLD SEPARATELY | |

Group: ISOLATORS

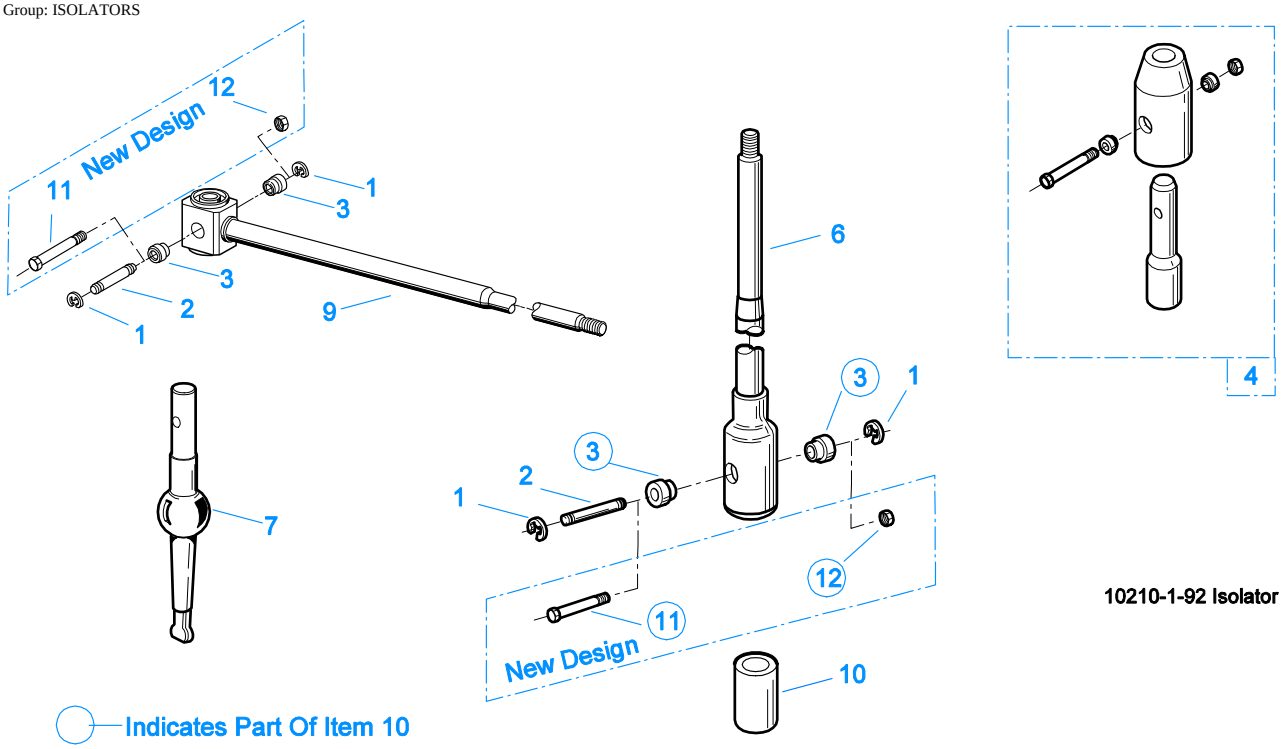


10210-1-92 Isolator

## ISOLATORS

| Item | Current Part | Description | Replaced Part | Qty. | Notes | Kits/Assys Where Needed |
|---|---|---|---|---|---|---|
| 1 | 19124 | -E- RING | | 2 | | |
| 2 | K-3467 | PIN REPLACEMENT KIT | 21245 | 1 | | |
| 3 | 21246 | BUSHING | | 2 | | K-2003,K-2428,K-2429,K-2978,K-3399,S-2129,S-2130,S-2519 |
| 4 | S-1794 | ISOLATOR ASSY | | 1 | | |
| 6 | 21247 | LEVER | | 1 | STRAIGHT 18.67" | |
| 7 | 21235 | STUB LEVER | | 1 | LOW TOWER | K-2428,S-1677 |
| 7 | 21236 | STUB LEVER | | 1 | HIGH TOWER | K-2429,S-1579,S-2130 |
| 7 | 4301168 | STUB LEVER | | 1 | MID TOWER | K-2978 |
| 9 | 21767 | 90 DEG LEVER | | 1 | STRAIGHT 33" | |
| 10 | K-3399 | ISOLATOR BUSHING KIT | 21244 ,23311 | 1 | | |
| 11 | X-8-560 | SCREW | | 1 | | |
| 12 | X-9-503 | NUT | | 1 | | |

## KITS & ASSEMBLIES

| Item | Current Part | Description | Replaced Part | Qty. | Notes | Kits/Assys Where Needed |
|---|---|---|---|---|---|---|
| | K-1476 | SHIFT LEVER HSG | 4530 ,17163 ,18298 ,4304905 ,A - 4437 | 1 | LOW TOWER | |
| | K-1921 | MASTER VALVE REPAIR KIT | | 1 | FOR A-6909 & A-5010 VALVES | |
| | K-1956 | COOLER INSTLN KIT | | 1 | | |
| | K-2003 | PIN & BUSHING KIT | | 1 | | |
| | K-2262 | OIL SEAL W/SLINGER | 19109 20807 ,20808 | 1 | "FOR MECHANICAL COVER" | K-3132 |
| | K-2394 | AIR SYSTEMS TOOL KIT | | 1 | | |
| | K-2428 | LEVER REPLACEMENT KIT | | 1 | LOW TOWER | |
| | K-2429 | LEVER REPLACEMENT KIT | | 1 | HIGH TOWER | |
| | K-2805 | SHIM KIT | 21452 K - 2106 | 1 | | K-2924,K-3132,S-2747 |
| | K-2910 | COVER & SCREW KIT | 4302854 | 1 | | |
| | K-2917 | SMALL PARTS KIT | | 1 | | |
| | K-2918 | OIL SEAL KIT | 4302322 4302323 | 1 | "FOR MAGNETIC COVER" | K-2924 |
| | K-2921 | GASKET KIT | | 1 | | K-2924,K-3132 |
| | K-2923 | RANGE PISTON KIT | | 1 | | K-2924,K-3132 |
| | K-2924 | BASIC REBUILD KIT | | 1 | ELECTRONIC SPEEDO FOR OVERHAUL KIT - ORDER THE REBUILD KIT AND THE REQUIRED INPUT SHAFT | |
| | K-2973 | SHIFT LEVER HSG KIT | 17166 ,17167 ,4303050 ,4304910 ,K - 1630 K - 1941 | 1 | HIGH TOWER | |
| | K-2977 | SHIFT LEVER HSG KIT | 4301167 ,4304907 ,A - 6040 | 1 | MID TOWER | |
| | K-2978 | LEVER REPLACEMENT KIT | | 1 | MID TOWER | |
| | K-3104 | ACTUATOR PIN KIT | 4303287 | 1 | | |
| | K-3128 | PISTON KIT | 4302177 | 1 | | |
| | K-3129 | BAR & RING KIT | 4302918 | 1 | | |
| | K-3130 | SHIFT YOKE KIT | 4302179 | 1 | | |
| | K-3131 | YOKE BAR KIT | 4302780 ,4303831 | 1 | | |
| | K-3132 | BASIC REBUILD KIT | | 1 | MECHANICAL SPEEDO FOR OVERHAUL KIT - ORDER THE REBUILD KIT AND THE REQUIRED INPUT SHAFT ASSY | |
| | K-3150 | IDLER SHAFT KIT | 4302261 ,4303503 | 1 | | |
| | K-3239 | REAR HSG REPL KIT | 4302274 | 1 | | |
| | K-3240 | REAR HSG REPL KIT | 4302534 | 1 | THRU-SHAFT PTO | |
| | K-3245 | AIR MODULE ASSY | A - 6342 | 1 | | |
| | K-3267 | CNTRSHFT KIT-W/REV & 1ST | 4303739 ,4304493 | 1 | STANDARD | |
| | K-3268 | CNTRSHFT KIT-W/REV & 1ST | 4303740 ,4304554 | 1 | LOWER W/PUMP | |
| | K-3269 | CNTRSHFT KIT-W/REV & 1ST | 4303758 ,4304552, 4303950 | 1 | LOWER & UPPER W/THRU SHAFT PTO | |
| | K-3270 | CNTRSHFT KIT-W/REV & 1ST | 4303759 ,4304553, 4303951 | 1 | LOWER W/PUMP & W/PTO | |
| | K-3376 | O-RING & WASHER KIT | 4301211 | 1 | | |
| | K-3399 | ISOLATOR BUSHING KIT | 21244 ,23311 | 1 | | |
| | K-3416 | GEAR UPDATE KIT | | 1 | FOR UNITS BUILT PRIOR TO 3-1-99 | |
| | K-3454 | SPEED SENSOR KIT | A - 6398 ,A - 6724 | 1 | SINGLE PICK-UP (2 PIN) | |
| | K-3455 | SPEED SENSOR KIT, DUAL | A - 7046 ,A - 7518 | 1 | DUAL PICK-UP (4 PIN) | |
| | K-3467 | PIN REPLACEMENT KIT | 21245 | 1 | | |
| | K-3475 | OIL COOLER KIT | K - 3212 | 1 | FOR FR SERIES (C2000) MODELS REQUIRING METRIC FASTENERS, REAR MOUNTING AUX C/S PUMP | |
| | K-3476 | PUMP INSTALLATION KIT | K - 3213 | 1 | AIR TO OIL COOLER INSTALATION KIT FOR FR SERIES (C2000) MODELS REQUIRING METRIC FASTENERS, REAR MOUNTED AUX C/S PUMP | |
| | K-3492 | SYNCHRONIZER KIT | K - 2446 | 1 | | |
| | K-3495 | SYNCHRONIZER REPLACEMENT KIT | K - 2922 | 1 | SLIDING CLUTCH INCLUDED IN KIT | |

| Item | Current Part | Description | Replaced Part | Qty. | Notes | Kits/Assys Where Needed |
|---|---|---|---|---|---|---|
| | K-3507 | PLUG RETAINING KIT | 4303832 ,4305218 ,4305219 | 1 | | |
| | K-3517 | LIFTING EYE KIT | A - 6409 | 1 | | |
| | K-3600 | CLUTCH INSTALLTION KIT | | 1 | FOR CURRENT DESIGN INPUT SHAFT (S-2822) | |
| | K-3602 | CLUTCH INSTALLTION KIT | 4302315 ,S - 2988 | 1 | FOR ORIGINAL DESIGN INPUT SHAFT (4302315) | |
| | K-3740 | EXTERNAL COOLER KIT | | 1 | FOR USE ON UNITS WITH A HYDRAULIC CLUTCH RELEASE | |
| | K-3883 | CONICAL WASHER FASTENER KIT | | 1 | TO CONVERT FROM LOCKWASHER TO CONICAL WASHER | |
| | K-4054 | FR CLUTCH HOUSING SERVICE KIT | | 1 | | |
| | K-4124 | CLUTCH INSTALLATION KIT (FR), HYDRAULIC RELEASE | | 1 | STANDARD FR INPUT SHAFT AND YOKE FOR HYDRAULIC CLUTCH RELEASE | |
| | S-1404 | OIL FILTER | 17238 | 1 | | |
| | S-1794 | ISOLATOR ASSY | | 1 | | |
| | S-2129 | SHIFT LEVER HSG ASSY | | 1 | LOW TOWER | |
| | S-2130 | SHIFT LEVER HSG ASSY | S - 2053 | 1 | HIGH TOWER | |
| | S-2347 | CASE ASSY | 4302071 | 1 | FOR USE W/INTEGRAL OIL PUMP | |
| | S-2348 | CASE ASSY | 4302645 | 1 | STANDARD | |
| | S-2501 | SPEEDO ROTOR ASSY | 4302242 | 1 | MAGNETIC | |
| | S-2502 | REAR BRG COVER ASSY | 4303604 ,4305827 | 1 | MECHANICAL - 4:00 OPENING | |
| | S-2503 | SPEEDO SPACER ASSY | 4302590 | 1 | MECHANICAL | |
| | S-2519 | SHIFT LEVER HSG ASSY | S - 2919 | 1 | MID TOWER | |
| | S-2543 | ROADRANGER VALVE ASSY | A - 5043 | 1 | RT - W/SHIFT DIAGRAM MEDALLION | |
| | S-2691 | REAR HOUSING ASSY | 4303750 | 1 | | K-3239 |
| | S-2692 | REAR HOUSING ASSY | 4303778 | 1 | THRU-SHAFT PTO | K-3240 |
| | S-2700 | SHIFT BAR HSG (FRF) | 4302642 ,4305077 | 1 | HOUSING ONLY | |
| | S-2701 | SHIFT BAR HSG ASSY (FRF) | 4302642 ,4305077 | 1 | COMPLETE - INCLUDES RANGE CYLINDER ASSY | |
| | S-2702 | SHIFT BAR HSG ASSY (FRF) | 4302642 ,4305077 | 1 | COMPLETE - INCLUDES RANGE CYLINDER ASSY AND OPTIONAL DETENT SPRING DESIGN | |
| | S-2706 | CASE ASSY | 4303707 | 1 | OPTIONAL - FOR USE W/INTEGRAL OIL COOLER | |
| | S-2747 | RANGE SECTION ASSY | | 1 | | |
| | S-2747R | REMAN RANGE SECTION ASSY | | 1 | | |
| | S-2809 | REAR BEARING COVER ASSY | 4302332 ,4303872 ,4304652 ,4305830 | 1 | PUSH-IN/THREAD-IN MAGNETIC PICK-UP | |
| | S-2822 | INPUT SHAFT ASSY | 4304633 | 1 | 2" PULL | K-3416,K-3600,K-4124 |
| | S-2859 | REAR BRG COVER ASSY | 4302732 ,4305826 | 1 | MECHANICAL - 6:00 OPENING | |

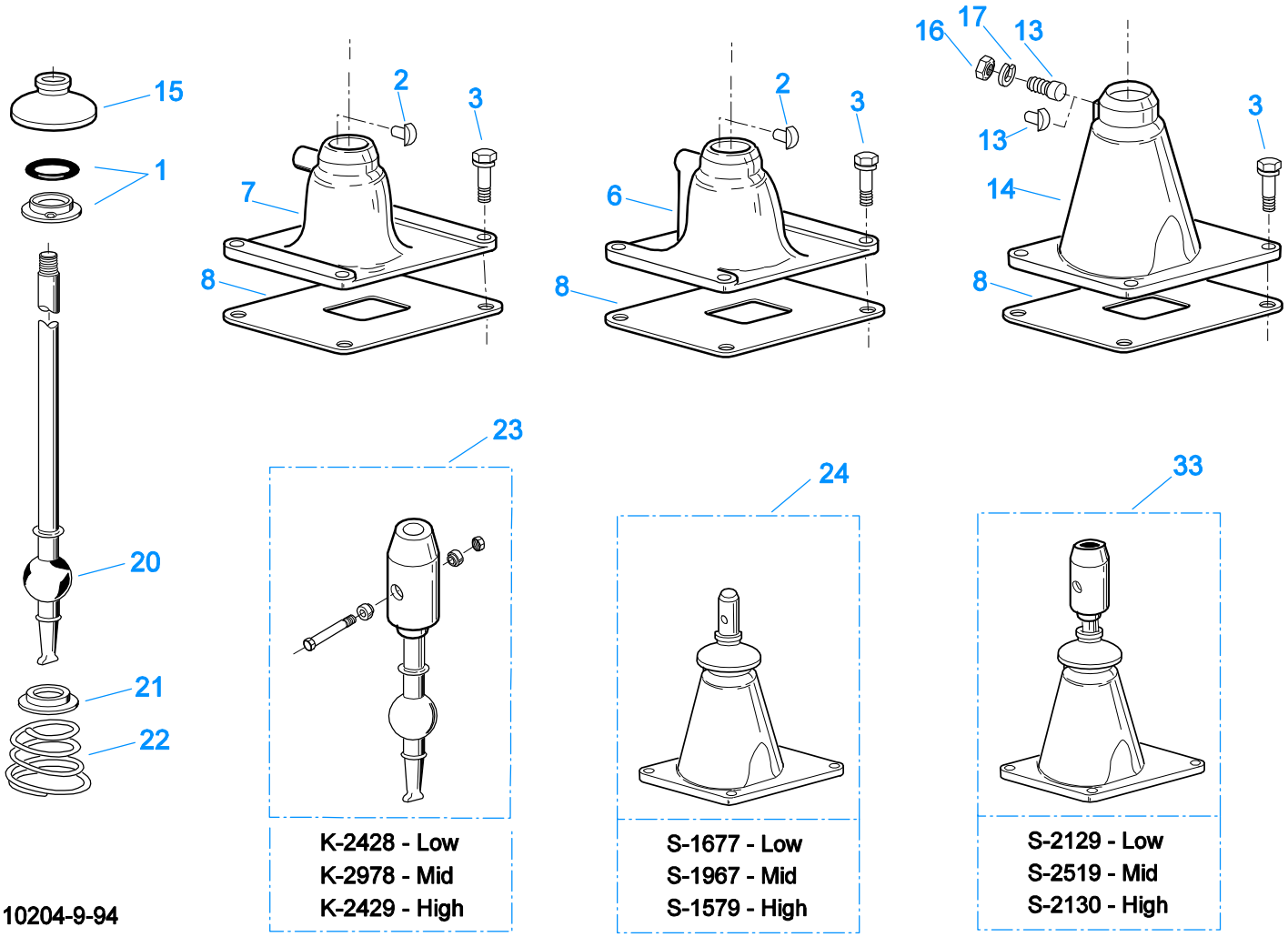


## LEVERS/HOUSINGS

| Item | Current Part | Description | Replaced Part | Qty. | Notes | Kits/Assys Where Needed |
|---|---|---|---|---|---|---|
| 1 | K-3376 | O-RING & WASHER KIT | 4301211 | 1 | | |
| 2 | 18299 | PIN | | 1 | | K-1476,K-2977,S-1677 |
| 3 | X-8C-1036M | CAPSCREW | X-8-1005M | 4 | M10 X 1.5 X 38MM | K-3883 |
| 6 | K-2977 | SHIFT LEVER HSG KIT | 4301167 ,4304907 ,A - 6040 | 1 | MID TOWER | |
| 7 | K-1476 | SHIFT LEVER HSG | 4530 ,17163 ,18298 ,4304905 ,A - 4437 | 1 | LOW TOWER | |
| 8 | 4305294 | GASKET | 4303431 | 1 | | K-1476,K-2428,K-2429,K-2921,K-2973,K-2977,K-2978,K-3476,K-3883,S-1579,S-1677,S-1967,S-2129,S-2130,S-2519,S-2701,S-2702 |
| 13 | 4303030 | PIN | | 1 | | K-2973,S-1579,S-2130 |
| 13 | 6541 | PIN | | 1 | 3/8" - USED W/17167 ONLY | |
| 14 | K-2973 | SHIFT LEVER HSG KIT | 17166 ,17167 ,4303050 ,4304910 ,K - 1630 K - 1941 | 1 | HIGH TOWER | |
| 15 | 10427 | BOOT | | 1 | | K-1476,K-2973,K-2977,S-1579,S-1677,S-2130 |
| 16 | X-1-600 | NUT | | 1 | 3/8"-24-N.F.PLAIN | |
| 17 | X-3-600 | LOCKWASHER | | 1 | 3/8" | |
| 20 | 17600 | GEAR SHIFT LEVER | | 1 | STRAIGHT - LOW 21-1/2" | |

| Item | Current Part | Description | Replaced Part | Qty. | Notes | Kits/Assys Where Needed |
|---|---|---|---|---|---|---|
| 20 | 18482 | GEAR SHIFT LEVER | | 1 | STRAIGHT - HIGH 35" | |
| 21 | 2538 | RETAINER | | 1 | | K-1476,K-2973,K-2977,S-1579,S-1677,S-2130 |
| 22 | 2536 | SPRING | | 1 | | K-1476,K-2973,K-2977,S-1579,S-1677,S-2130 |
| 23 | K-2428 | LEVER REPLACEMENT KIT | | 1 | LOW TOWER | |
| 23 | K-2429 | LEVER REPLACEMENT KIT | | 1 | HIGH TOWER | |
| 23 | K-2978 | LEVER REPLACEMENT KIT | | 1 | MID TOWER | |
| 24 | S-1579 | SHIFT TOWER ASSY | | 1 | HIGH TOWER | |
| 24 | S-1677 | SHIFT TOWER ASSY | | 1 | LOW TOWER | |
| 24 | S-1967 | SHIFT TOWER ASSY | | 1 | MID TOWER | |
| 33 | S-2129 | SHIFT LEVER HSG ASSY | | 1 | LOW TOWER | |
| 33 | S-2130 | SHIFT LEVER HSG ASSY | S - 2053 | 1 | HIGH TOWER | |
| 33 | S-2519 | SHIFT LEVER HSG ASSY | S - 2919 | 1 | MID TOWER | |

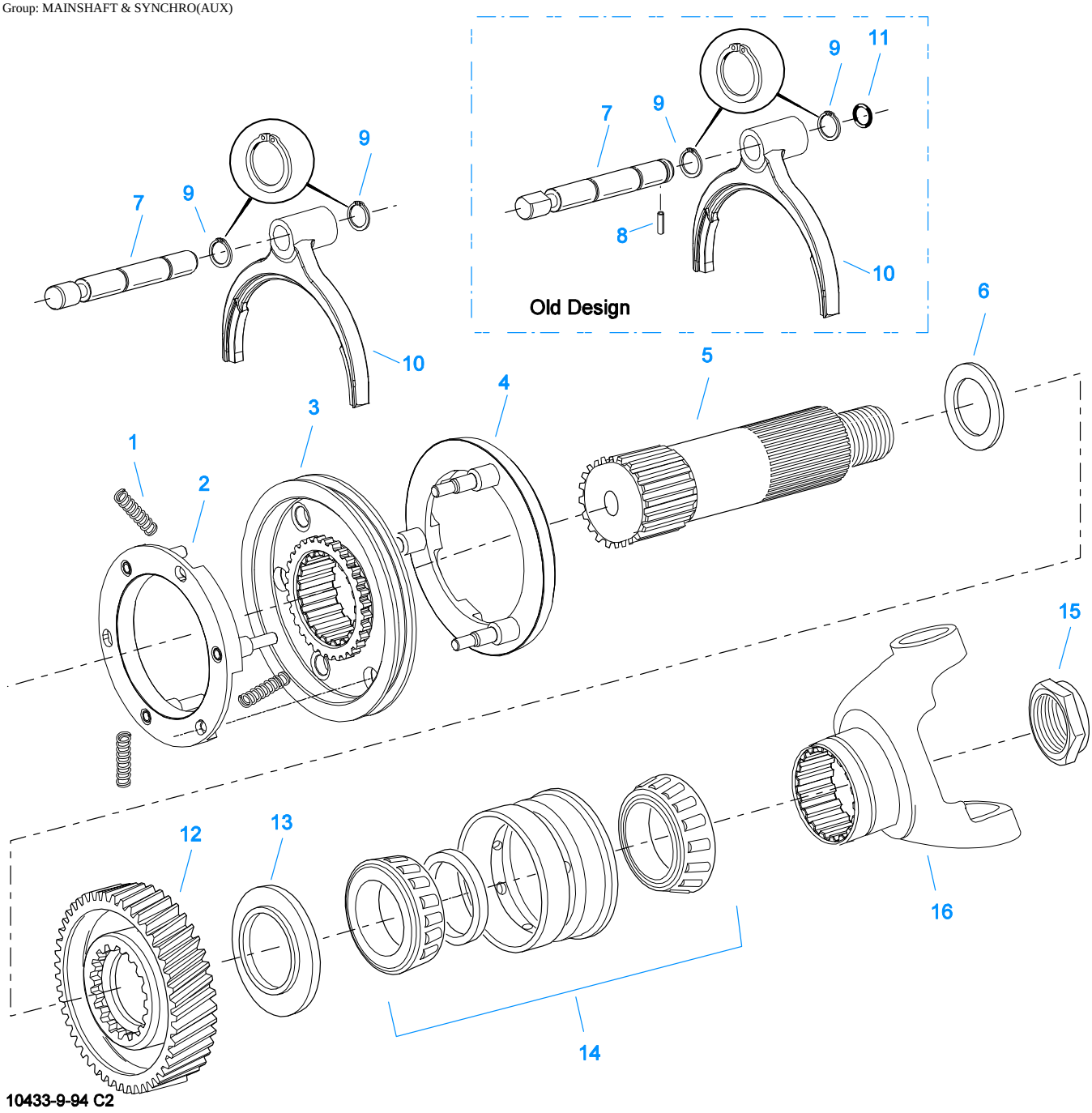


## MAINSHAFT & SYNCHRO(AUX)

| Item | Current Part | Description | Replaced Part | Qty. | Notes | Kits/Assys Where Needed |
|---|---|---|---|---|---|---|
| 1 | 14897 | SPRING | | 3 | | K-2917,K-2924,K-3132,K-3492,K-3495 |
| 2 | A-7331 | SYNCHRONIZER ASSY | 4304396 4304397 A - 5917 | 1 | HI RANGE | K-3492,K-3495 |
| 3 | 4300924 | SLIDING CLUTCH | | 1 | | K-3495 |
| 4 | A-7254 | SYNCHRONIZER ASSEMBLY | A - 4937 A - 5876 | 1 | LO RANGE | K-3492,K-3495 |
| 5 | 4302276 | AUXILIARY MAINSHAFT | | 1 | | |
| 6 | 4302243 | WASHER | | 1 | | K-2917 |
| 7 | K-3131 | YOKE BAR KIT | 4302780 ,4303831 | 1 | | |
| 8 | 5575506 | PIN | | 1 | NOT REQUIRED FOR 4303831 YOKE BAR | |
| 9 | 4302080 | SNAP RING | | 2 | | K-2923,K-3128,K- |

| Item | Current Part | Description | Replaced Part | Qty. | Notes | Kits/Assys Where Needed |
|---|---|---|---|---|---|---|
| | | | | | | 3129,K-3130,K-3131,K-3239 |
| 10 | K-3130 | SHIFT YOKE KIT | 4302179 | 1 | | |
| 11 | 5568519 | NO LONGER AVAILABLE | | 1 | NOT REQUIRED FOR 4303831 YOKE BAR | |
| 12 | 4302413 | REDUCTION GEAR | 4302409 | 1 | | |
| 13 | 22898 | SPACER | | 1 | | K-2917 |
| 14 | 5556503-BOX | BEARING | 5556503 | 1 | | K-2924,K-3132 |
| 15 | K-4122 | HEX FLANGE CRIMPED NUT KIT | 4302321,4306520 | 1 | | |
| 16 | 5505543 | YOKE-1710 HALF ROUND | | 1 | | |
| 16 | 5505544 | YOKE-1710 FULL ROUND | | 1 | | |
| 16 | 5505545 | YOKE-1760 HALF ROUND | | 1 | | |
| 16 | 5505546 | YOKE-1760 FULL ROUND | | 1 | | |
| 16 | 5505547 | YOKE-1810 HALF ROUND | | 1 | | |
| 16 | 5505548 | YOKE-1810 FULL ROUND | | 1 | | |

Group: MAINSHAFT ASSY

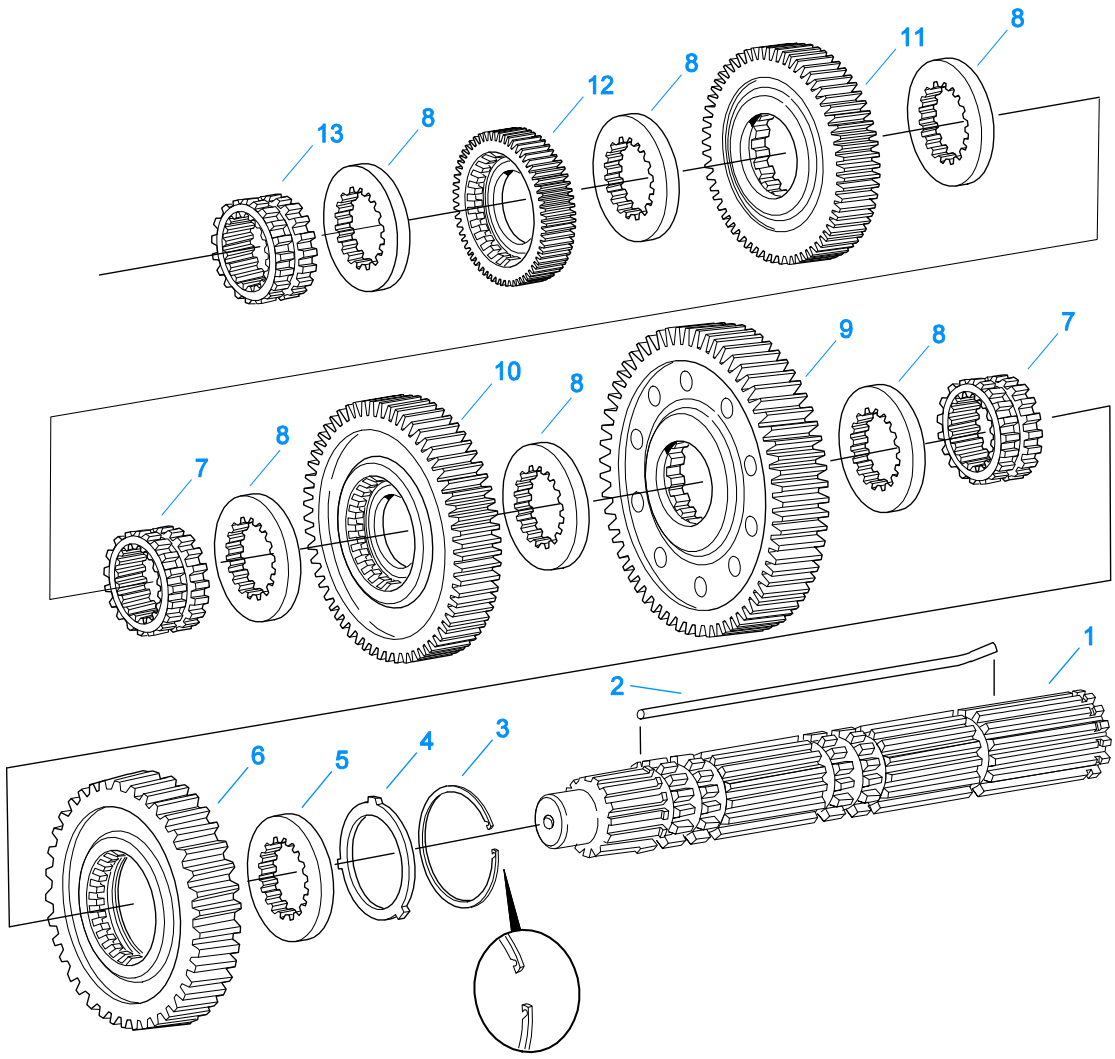


10327-9-94 C2

## MAINSHAFT ASSY

| Item | Current Part | Description | Replaced Part | Qty. | Notes | Kits/Assys Where Needed |
|---|---|---|---|---|---|---|
| 1 | 4304617 | MAINSHAFT | 4302318 | 1 | | |
| 2 | 4302316 | KEY | | 1 | | K-2917 |
| 3 | 4302184 | SNAP RING | | 1 | | K-2917 |
| 4 | 4302312 | SPACER | | 1 | | K-2917 |
| 5 | 4302259 | WASHER | | 1 | | K-2917 |
| 6 | 4303033 | REVERSE GEAR-MAINSHAFT | 4303116 | 1 | | |
| 7 | 4302265 | SLIDING CLUTCH | | 2 | | |
| 8 | 4302258 | WASHER | | 6 | | K-2917 |
| 9 | 4303880 | 1ST GEAR-MAINSHAFT | 4304494,4303741 | 1 | | |
| 10 | 4302421 | 2ND GEAR-MAINSHAFT | 4302405 | 1 | | |
| 11 | 4302529 | 3RD GEAR-MAINSHAFT | 4302403 | 1 | | |
| 12 | 4303006 | NLA-ORDER K-3416 FOR UNITS BUILT PRIOR TO 3-1-99 | | 1 | | |
| 12 | 4303738 | NLA-ORDER K-3416 FOR UNITS BUILT PRIOR TO 3-1-99 | | 1 | | |
| 12 | 4304001 | 4TH GEAR-MAINSHAFT | 4304000 | 1 | | K-3416 |
| 13 | 4302309 | NLA-ORDER K-3416 FOR UNITS BUILT PRIOR TO 3-1-99 | | 1 | | |
| 13 | 4304014 | SLIDING CLUTCH | | 1 | | K-3416 |

Group: MISC. THRU-SHAFT PTO
Sub-Group: REAR HOUSING ASSY

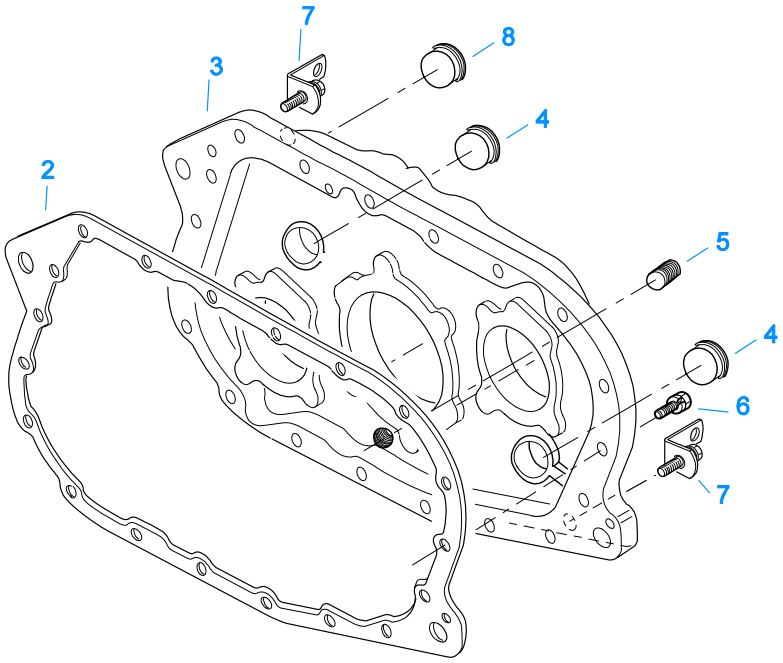


10414A-10/95 Thru Sh PTO

# MISC. THRU-SHAFT PTO

## REAR HOUSING ASSY

| Item | Current Part | Description | Replaced Part | Qty. | Notes | Kits/Assys Where Needed |
|---|---|---|---|---|---|---|
| 2 | 4302248 | GASKET | | 1 | | |
| 3 | K-3240 | REAR HSG REPL KIT | 4302534 | 1 | | |
| 3 | S-2692 | REAR HOUSING ASSY | 4303778 | 1 | | |
| 4 | 21073 | EXPANSION PLUG | | 2 | | |
| 6 | X-8-1028M | SCREW | X 8L 1021M | 6 | 10MM X 1.5 X 12MM | |
| 6 | X-8L-1021M | CAPSCREW & WASHER | | 6 | M10 X 1.5 | |
| 7 | K-3517 | LIFTING EYE KIT | A - 6409 | 2 | | |
| 8 | K-3507 | PLUG RETAINING KIT | 4303832 ,4305218 ,4305219 | 1 | | |
| 9 | 20815 | LIFTING EYE | 17105 | 2 | | |
| 10 | X-8-1003M | CAPSCREW | | 2 | M10 X 1.5 X 25MM | |

## MISCELLANEOUS

| Item | Current Part | Description | Replaced Part | Qty. | Notes | Kits/Assys Where Needed |
|---|---|---|---|---|---|---|
| | 20400 | SHIFT DIAGRAM LABEL | 19301 | 1 | | |
| | 71203 | SILICONE LUBE | | 1 | 8 OZ (236.59 CC)-FLEET SIZE | |
| | 71204 | ADHESIVE SEALANT | | 1 | 0.5 CC (SINGLE APPLICATION SIZE) | K-3475,K-3476,K-3507 |
| | 71205 | SEALANT | | 1 | 2 CC (SINGLE APPLICATION SIZE) | K-3476 |
| | 71206 | SILICONE LUBE | | 1 | 4 CC (SINGLE APPLICATION SIZE) | K-2428,K-2429,K-2923,K-2978 |

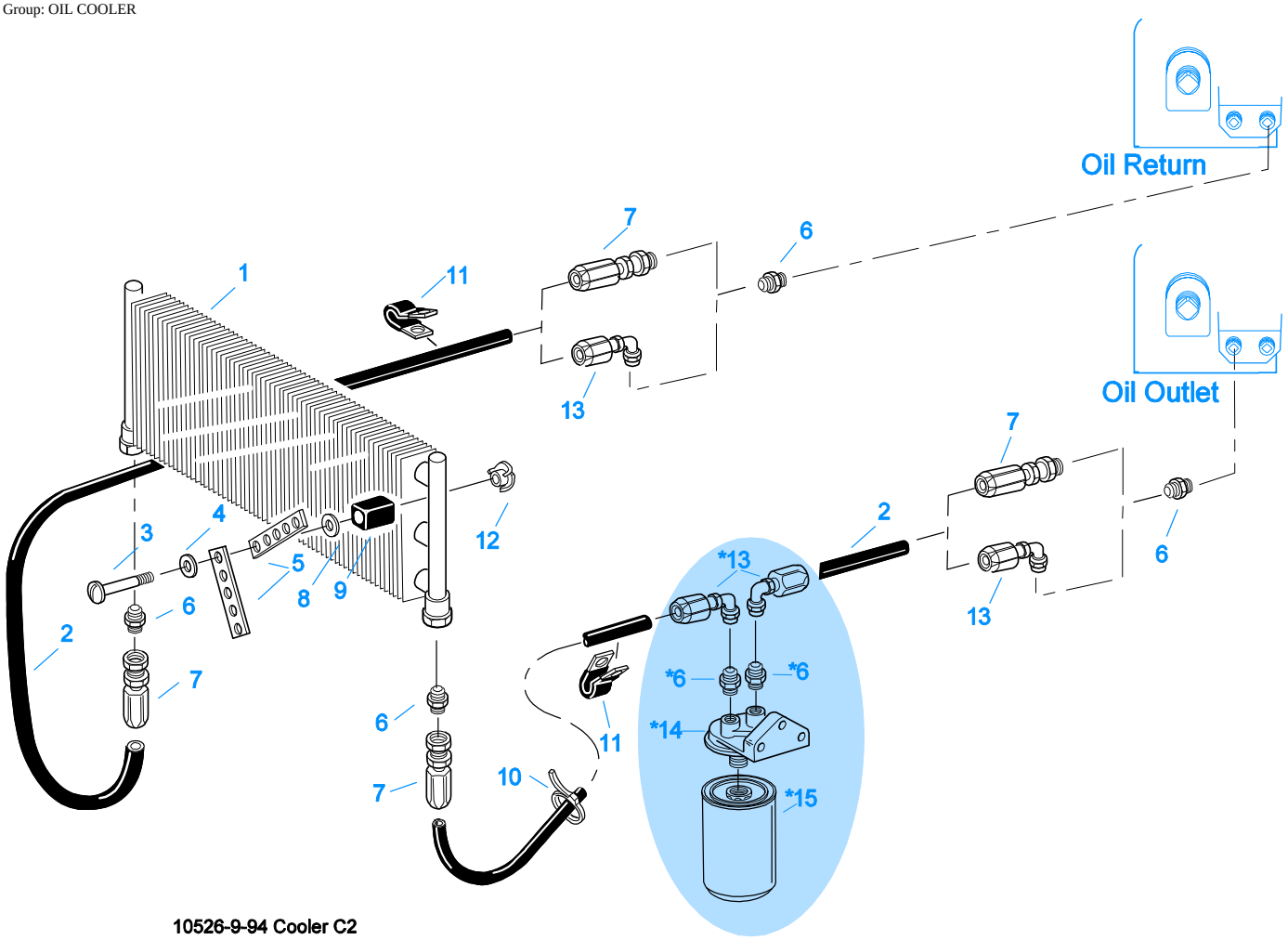


## OIL COOLER

| Item | Current Part | Description | Replaced Part | Qty. | Notes | Kits/Assys Where Needed |
|---|---|---|---|---|---|---|
| 1 | 18025 | OIL COOLER | | 1 | | K-1956,K-3476 |
| 2 | 19424 | HOSE | | 1 | 25 FEET | K-1956,K-3476 |
| 3 | X-8-535 | CAPSCREW | | 2 | 5/16"-16X2-1/2" | |
| 4 | X-3-506 | LOCKWASHER | | 2 | 5/16" | |
| 5 | 18211 | BRACKET | | 4 | | K-1956,K-3476 |
| 6 | 19419 | CONNECTOR | | 6 | | K-1956,K-3476,S-1404 |
| 7 | 19415 | SWIVEL | | 4 | | K-1956,K-3476 |
| 8 | X-10-501 | WASHER | | 2 | 5/16" | |
| 9 | 18209 | PLUG-RUBBER MOUNT | | 2 | | K-1956,K-3476 |
| 10 | 17190 | STRAP | | 8 | | K-1956,K-3476 |
| 11 | 19423 | CLAMP | | 5 | | K-1956,K-3476 |
| 12 | 18210 | NUT | | 2 | | K-1956,K-3476 |
| 13 | 19422 | ELBOW | | 4 | | K-1956 |
| 14 | S-1404 | OIL FILTER | 17238 | 1 | | |
| 15 | 17237 | FILTER ELEMENT | | 1 | | S-1404 |

Group: REVERSE IDLER

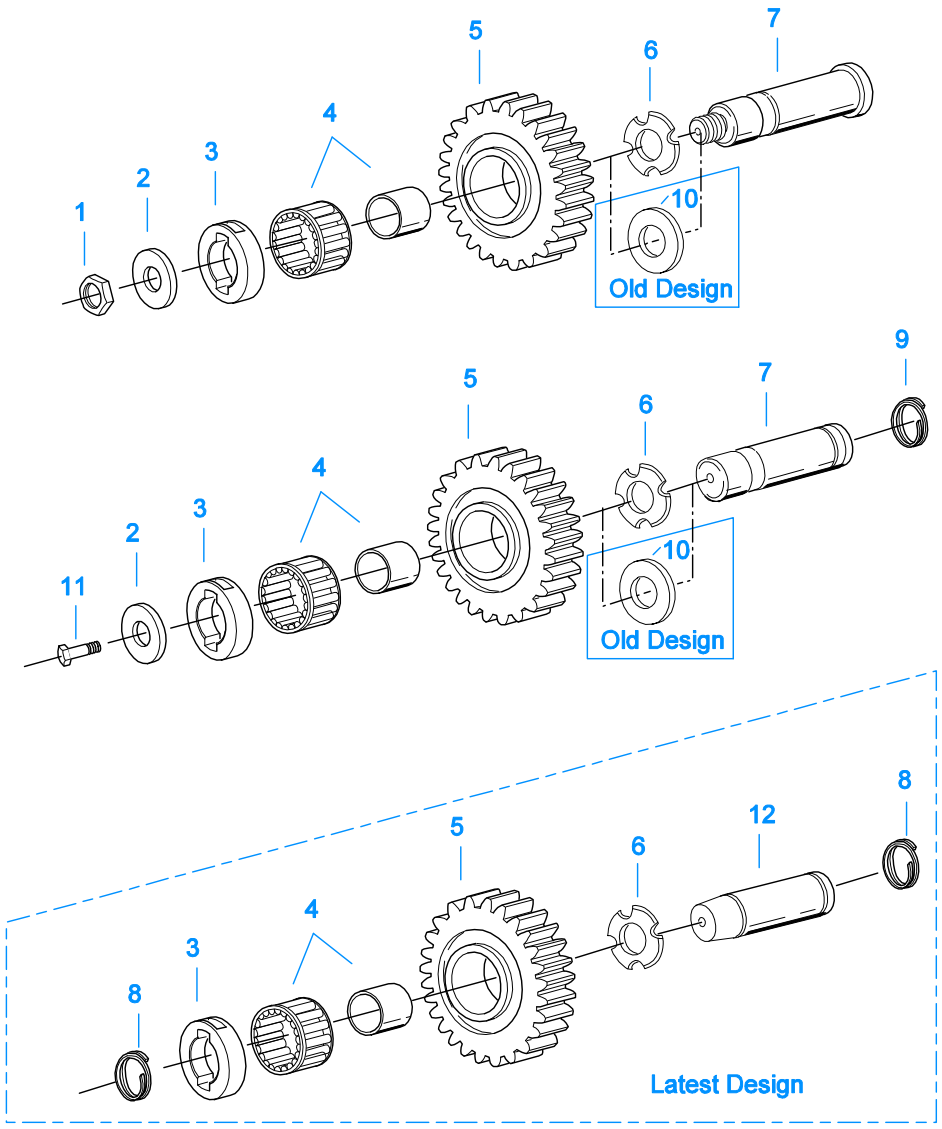


11380-11-95

## REVERSE IDLER

| Item | Current Part | Description | Replaced Part | Qty. | Notes | Kits/Assys Where Needed |
|---|---|---|---|---|---|---|
| 1 | K-3150 | IDLER SHAFT KIT | 4302261 ,4303503 | 2 | | |
| 2 | 14283 | WASHER | | 2 | | |
| 3 | 4302241 | WASHER | | 2 | | K-3150 |
| 4 | 14287 | BEARING | 4305020 | 2 | | K-2924,K-3132 |
| 5 | 4303117 | REVERSE IDLER GEAR | | 2 | | |
| 6 | 4302982 | WASHER | 14282 | 2 | | K-3150,S-2347,S-2348,S-2706 |
| 7 | K-3150 | IDLER SHAFT KIT | 4302261 ,4303503 | 2 | | |
| 8 | 4303336 | RETAINING RING | | 4 | | K-3150 |
| 9 | 4303336 | RETAINING RING | | 2 | | K-3150 |
| 10 | 14282 | NO LONGER AVAILABLE | | 2 | | |
| 11 | X-8-1600M | CAPSCREW | | 2 | M16 X 2 X 30MM | |
| 12 | 4305512 | REVERSE IDLER SHAFT | | 2 | | K-3150 |

Group: ROADRANGER VALVE

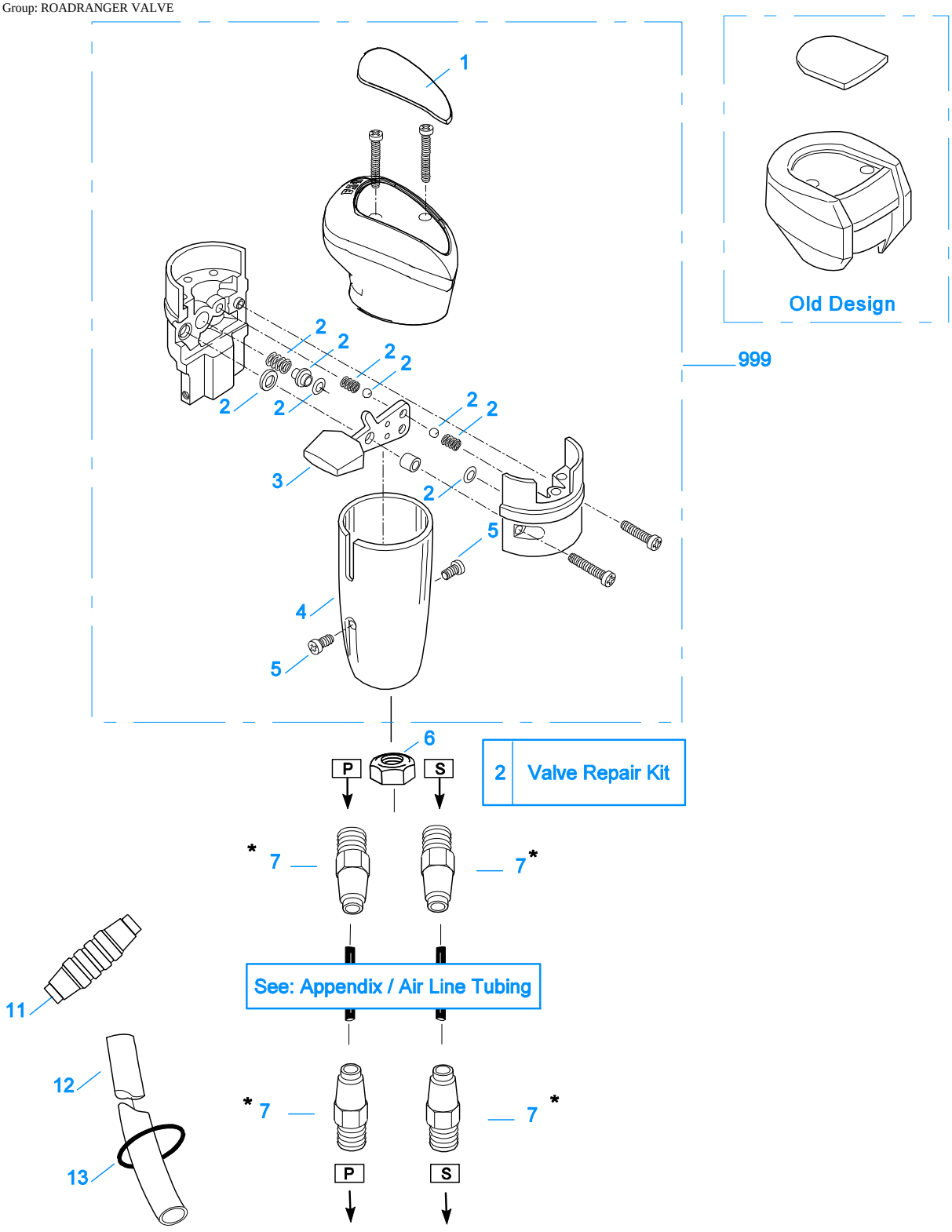


10109-1-97 RRV C2

*For Connector component information see Appendix.

## ROADRANGER VALVE

| Item | Current Part | Description | Replaced Part | Qty. | Notes | Kits/Assys Where Needed |
|---|---|---|---|---|---|---|
| 1 | 5586100 | MEDALLION, LOGO | | 1 | (LATEST DESIGN) FULLER LOGO ONLY | A-6909 |

| Item | Current Part | Description | Replaced Part | Qty. | Notes | Kits/Assys Where Needed |
|---|---|---|---|---|---|---|
| 1 | 5586106 | SHIFT DIAGRAM MEDALLION | | 1 | FR/FRF/FRO/FROF | S-2543 |
| 2 | K-1921 | MASTER VALVE REPAIR KIT | | 1 | FOR A-6909 & A-5010 VALVES | |
| 3 | 20495 | LEVER | | 1 | | A-6909 |
| 4 | 20112 | COVER | | 1 | | A-6909 |
| 5 | X-8-213 | SCREW | X 8 202 | 2 | 8-32X3/8" | |
| 6 | X-9-802 | NUT | | 1 | 1/2"-13 | |
| 7 | 84003 | CONNECTOR ASSY | 82503 | 4 | 5/32"TUBE-1/16"NPTF | |
| 7 | 84005 | CONNECTOR ASSY | | 4 | "PUSH-TO-CONNECT" 5/32"TUBE-1/16"NPTF | K-3245 |
| 11 | 84102 | UNION ASSY | | 1 | 5/32" TUBING | |
| 11 | 84103 | UNION ASSY | | 1 | "PUSH-TO-CONNECT" 5/32" TUBING | |
| 12 | 80120 | SHEATHING (50 FT ROLL) | | 1 | 5/32" - BLACK 50' | |
| 13 | 13571 | -O- RING CLAMP | | 2 | | |
| 999 | A-6909 | ROADRANGER VALVE ASSY | A - 5010 ,A - 5310 | 1 | STANDARD-W/LOGO | |
| 999 | S-2543 | ROADRANGER VALVE ASSY | A - 5043 | 1 | FR/FRF/FRO/FROF-W/MEDALLION | |

Group: SHIFT BAR HOUSING (FRF)

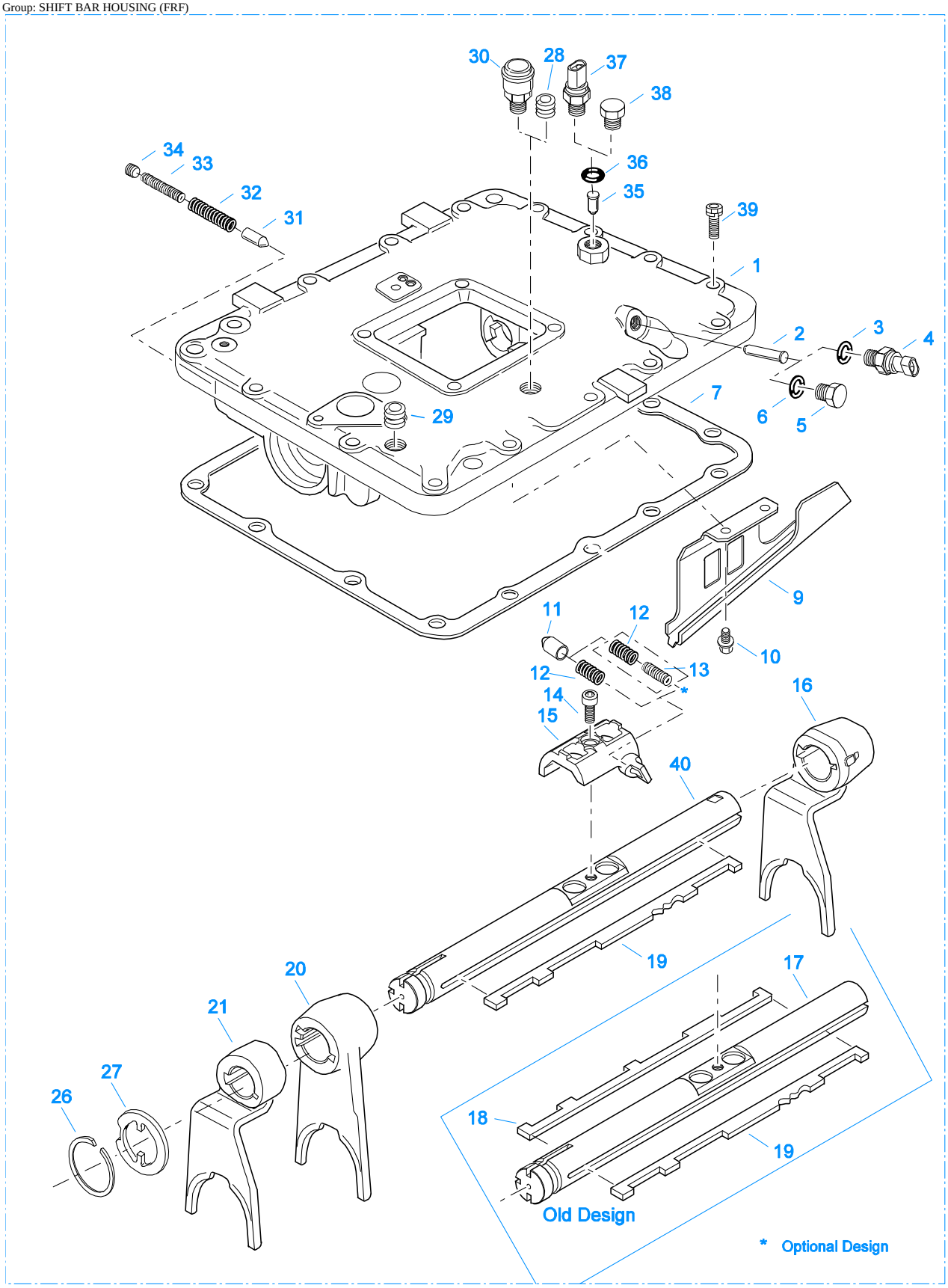


10237-1-97

## SHIFT BAR HOUSING (FRF)

| Item | Current Part | Description | Replaced Part | Qty. | Notes | Kits/Assys Where Needed |
|---|---|---|---|---|---|---|
| 1 | S-2700 | SHIFT BAR HSG (FRF) | 4302642 ,4305077 | 1 | HOUSING ONLY | |
| 2 | 4302713 | PIN | | 1 | AFTER S/N 51109212 | S-2701,S-2702 |
| 2 | 4303767 | PIN | | 1 | PRIOR TO S/N 51109212 | |
| 3 | 5568504 | -O- RING | | 1 | TO BE USED WITH SWITCH ONLY | |
| 4 | 4302748 | REVERSE SWITCH | | 1 | | |
| 5 | 4302142 | PLUG | | 1 | M14 X 2 HEX | S-2700,S-2701,S-2702 |
| 6 | 14192 | -O- RING | | 1 | TO BE USED WITH PLUG ONLY | S-2700,S-2701,S-2702 |
| 7 | 4302156 | GASKET | | 1 | | K-2921,K-3883,S-2701,S-2702 |
| 9 | 4302175 | OIL TROUGH | | 1 | | S-2701,S-2702 |
| 10 | X-8-0801M | CAPSCREW | | 2 | M8 X 1.25 X 12MM | |
| 11 | 4304138 | PLUNGER | 4302162 | 1 | | K-2917,S-2701,S-2702 |
| 12 | 4302134 | SPRING | | 1 | STANDARD | K-2917,S-2701,S-2702 |
| 13 | 4303135 | SPRING | | 1 | | S-2702 |
| 14 | X-8-1013M | SCREW | | 1 | M10 X 1.5 X 20MM | |
| 15 | 4303039 | SHIFT BLOCK | | 1 | | S-2701,S-2702 |
| 16 | 4302168 | SHIFT YOKE | | 1 | REVERSE/LO | S-2701,S-2702 |
| 17 | 4303037 | SHIFT SHAFT | | 1 | CAN BE USED WITH EITHER 4305077 OR 4302642 SHIFT BAR HOUSING | |
| 18 | 4304604 | KEY | 4302158 | 1 | SHIFT | K-2917,K-3416 |
| 19 | 4302159 | INTERLOCK KEY | | 1 | DETENT | S-2701,S-2702 |
| 20 | 4302166 | SHIFT YOKE | | 1 | 1ST/2ND | S-2701,S-2702 |
| 21 | 4302164 | SHIFT YOKE | | 1 | 3RD/4TH | S-2701,S-2702 |
| 26 | 4302183 | SNAP RING | | 1 | | K-2917,S-2701,S-2702 |
| 27 | 4302172 | BIAS PLATE | | 1 | | K-2917,S-2701,S-2702 |
| 28 | X-12-404 | PIPE PLUG | | 1 | 1/4" NPT | |
| 28 | X-12-603 | PIPE PLUG | X12 602 | 1 | 3/8" NPT | |
| 29 | X-12-603 | PIPE PLUG | | 1 | 3/8" NPT | |
| 30 | 4302857 | BREATHER | | 1 | 3/8" NPT | |
| 30 | 4304602 | BREATHER | 23605 | 1 | 1/4" NPT | K-3476 |
| 31 | 4302133 | BIAS PLUNGER | | 1 | | K-2917,S-2701,S-2702 |
| 32 | 4302138 | SPRING | | 1 | OUTER | K-2917,S-2701,S-2702 |
| 33 | 4302139 | SPRING | | 1 | INNER | K-2917,S-2701,S-2702 |
| 34 | X-12-208 | PIPE PLUG | | 1 | 1/8" NPT | |
| 35 | 4302153 | PIN | | 1 | | S-2701,S-2702 |
| 36 | 5568510 | -O- RING | | 1 | USE WITH SWITCH OR PLUG | S-2700,S-2701,S-2702 |
| 37 | 4302749 | NEUTRAL SWITCH | | 1 | | |
| 38 | 4302143 | PLUG | | 1 | M16 X 1.5 HEX | S-2700,S-2701,S-2702 |
| 39 | X-8C-1036M | CAPSCREW | X-8-1005M | 16 | M10 X 1.5 X 38MM | K-3883 |
| 40 | 4305078 | SHIFT SHAFT | | 1 | CAN ONLY BE USED WITH 4305077 SHIFT BAR HOUSING | S-2701,S-2702 |
| 999 | S-2701 | SHIFT BAR HSG ASSY (FRF) | 4302642 ,4305077 | 1 | COMPLETE - INCLUDES RANGE CYLINDER ASSY | |
| 999 | S-2702 | SHIFT BAR HSG ASSY (FRF) | 4302642 ,4305077 | 1 | COMPLETE - INCLUDES RANGE CYLINDER ASSY AND OPTIONAL DETENT SPRING DESIGN DETENT SPRING. IT IS USED TO INCREASE SHIFTER DETENT FORCE. | |